Managing Vertical Fire Spread in Multi-Story Buildings Through Effective Perimeter Fire Barrier Systems

Owens Corning Architect-Engineer-Contractor/Consultant (AEC) Team Map

•**Joseph (JJ) Joslin**
•650-868-0982
•Joseph.Joslin@OwensCorning.com

•**Drew Clausen (AEC Team Leader)**
•630-750-9459
•Drew.Clausen@OwensCorning.com

•**Susan Raneri**
•617-999-2737
•Susan.Raneri@OwensCorning.com

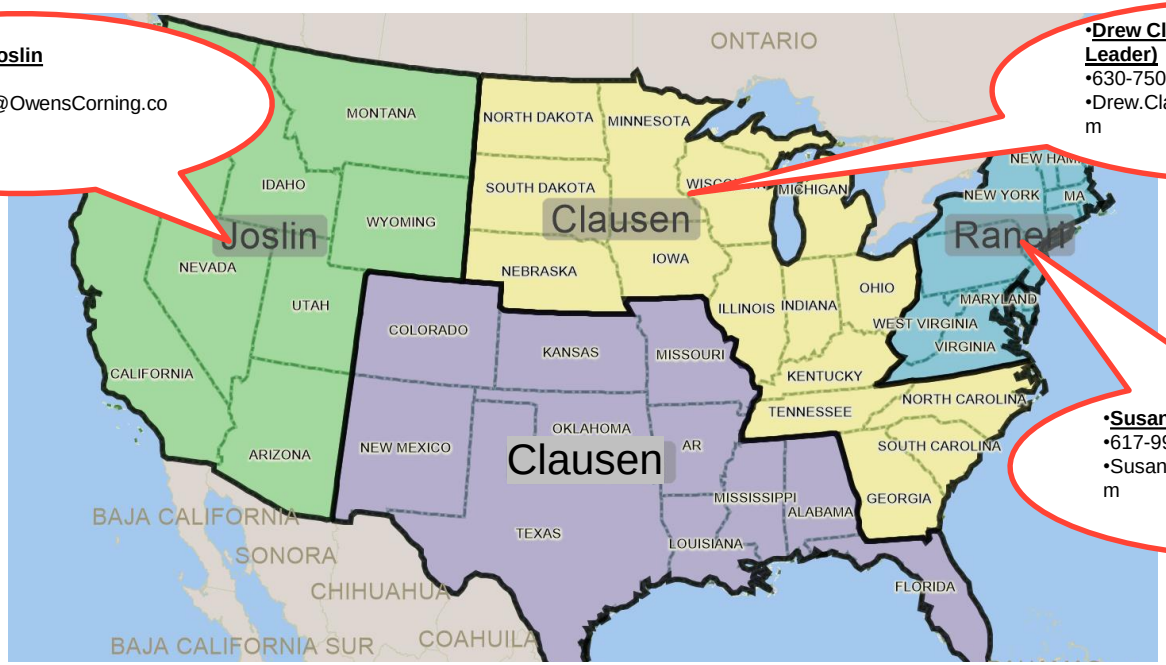

Owens Corning Overview

- Founded in 1938
- Three market-leading businesses: Insulation, Roofing and Composites
- WHQ in Toledo, OH with 20,000 employees in 37 countries
- FORTUNE 500® company for 64 consecutive years
- Component of Dow Jones Sustainability World Index for 9 consecutive years

Building Materials




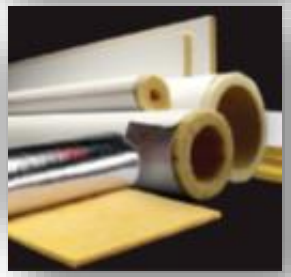
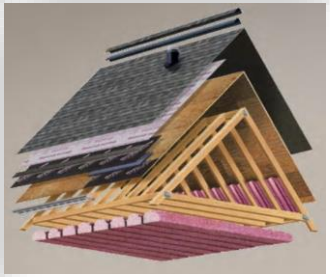

Composites




History

•Owens Corning began when an experiment with glass building blocks produced an unexpected result – it revealed a way to make glass fibers in commercial quantities.

•That discovery launched more than a new product. It set in motion a remarkable series of events that included the birth of an innovative company that would develop new industries related to the production of fiber glass materials.

•The first, historic step occurred on Oct. 31, 1938, when Owens-Illinois and Corning Glass officially spun off and incorporated Owens-Corning Fiberglas Corp., based in Toledo, Ohio.
•Owens Corning's operations today span the world.

•It is a leading global producer of residential and commercial building materials, including insulation and roofing shingles; glass-fiber reinforcements for products such as cars, boats, wind blades and smart phones; and engineered materials for composite systems

•Owens Corning Quick Facts

- Founded in 1938
- 2018 sales: $7.1 billion
- 20,000 employees
- Plants and technical centers in 33 countries
- Fortune 500® company for 64 consecutive years
- Component of Dow Jones Sustainability World Index for 9 consecutive years
- Three market-leading businesses: Insulation, Roofing and Composites

Agenda

- Why is fire containment important?
- 3 Elements of Life Safety
- Fire Performance of Building Materials
- Building Code Requirements and ASTM E 2307
- Design Principles
- Rated Curtain Wall Assemblies
- What do the ratings mean?
- Spandrel Height and Leap Frog
- Special Conditions
- Engineering Judgments
- Q&A

Why is fire containment important?

Why is fire containment important?

- Fire in a 32 story Madrid High Rise in 2005.
- The fire started on one floor and spread vertically at the exterior of the building.
- Height requirements are set for this reason - to protect curtain wall spandrels.
- The area where non-rated curtain wall bypasses a rated floor assembly.

Fire Containment

High-Rise Fire at 135 S. Lasalle Building in Chicago on December 6, 2004

- Burned for 6 hours
- Fire contained to 29th and 30th floors
- Fire containment is achievable contrary to Madrid fire.

Fire Containment

High-Rise Fire at First Interstate Bank in Los Angeles, CA on May 4, 1988

- Fire contained 12th to 16th floors (of 62 floors)
- Fire extended to floors above primarily via outer walls. Lapping up as much as 30 feet up face of bldg.

Development of Perimeter Fire Containment

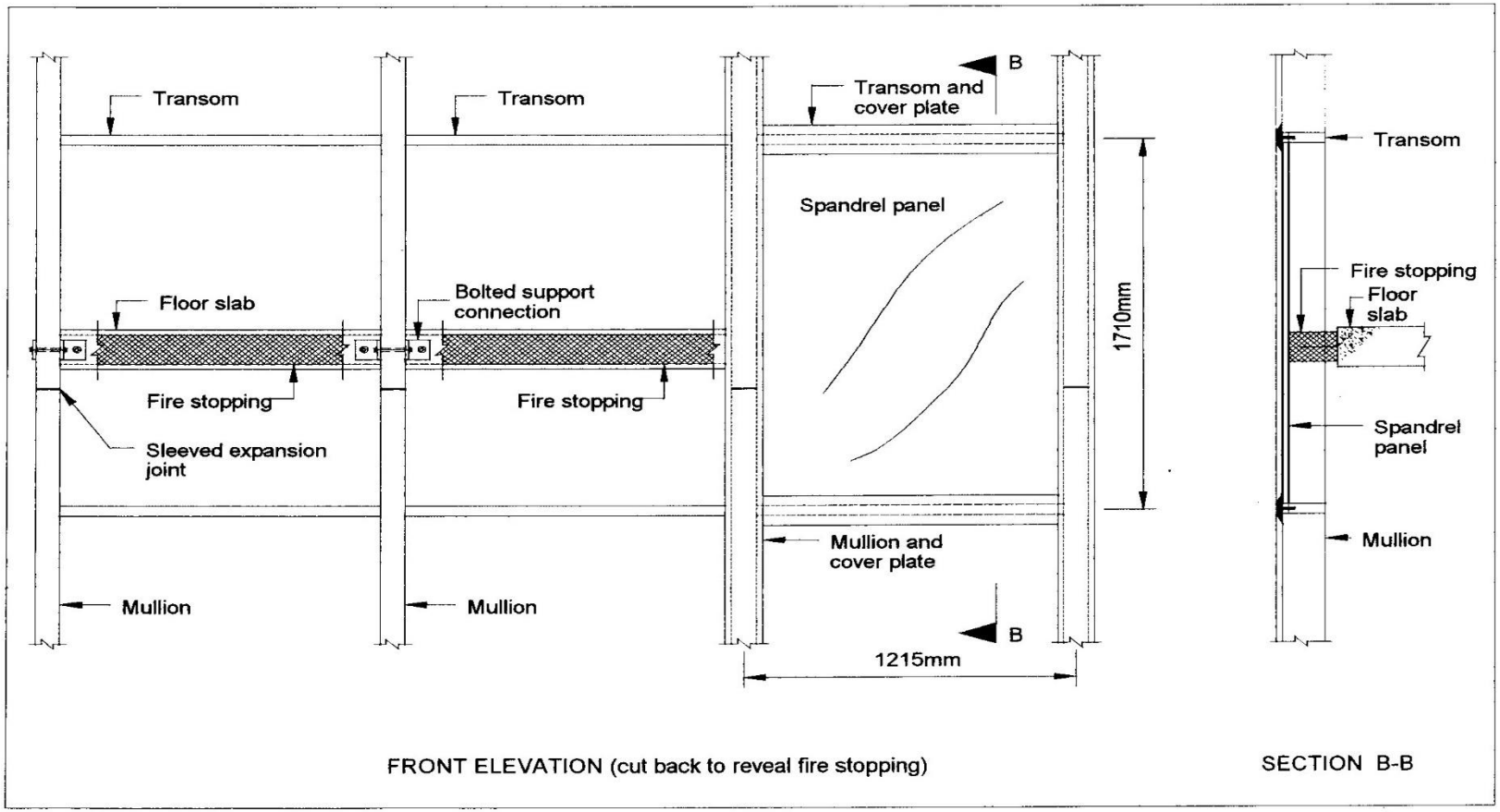

Figure 1 - Typical curtain wall system panel

Loss Prevention Council – United Kingdom 1999

- Example of spandrel left unprotected
- Curtain wall failed & safing in void fell out
- Within 10 minutes into fire – glass broke out and safing fell out of void not protecting spandrel area & fire propagated to next floor. Proven by Loss Prevention Council

Development of Perimeter Fire Containment

Underwriters Laboratories

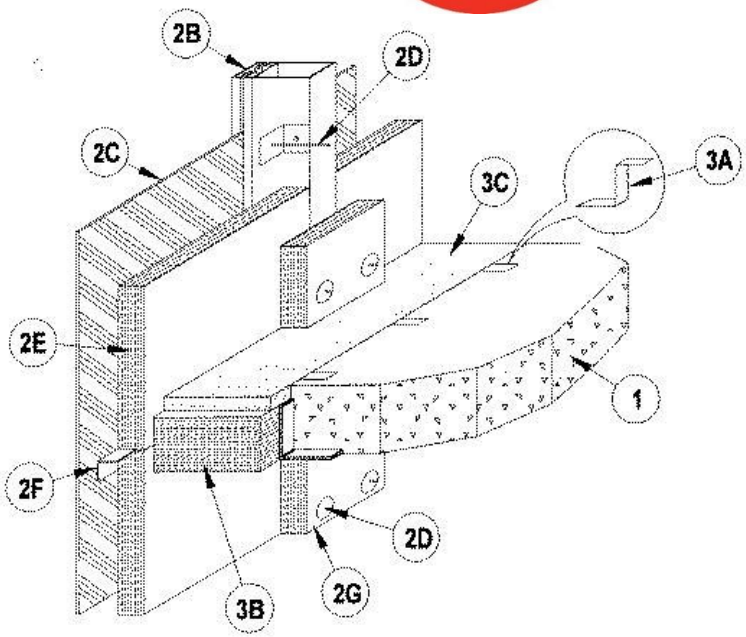

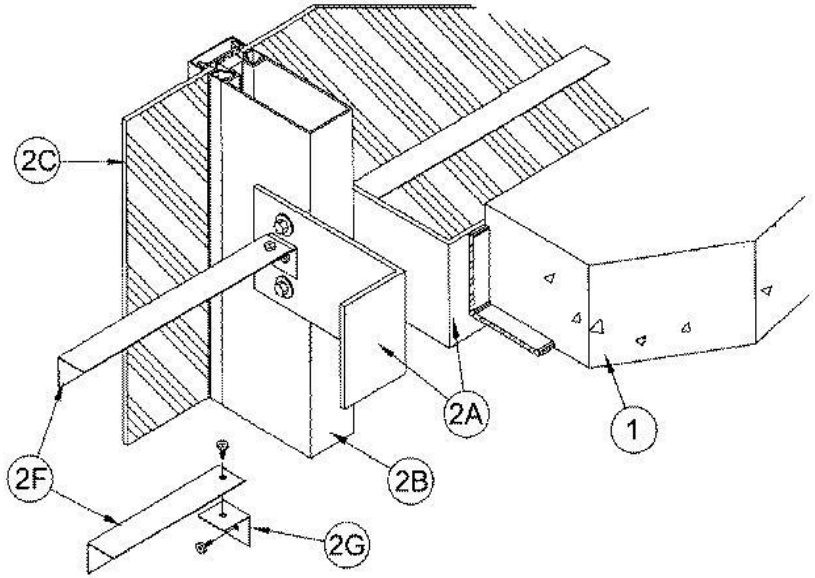

UL's First Published Curtain Wall Assembly: CW-S-2001

Issued: 4/14/97

- Pioneered the perimeter fire containment system
- Helped UL develop a test standard for systems to be evaluated in their lab and then listed in their directory. ASTM E2307 not adopted yet.

The Balanced Approach

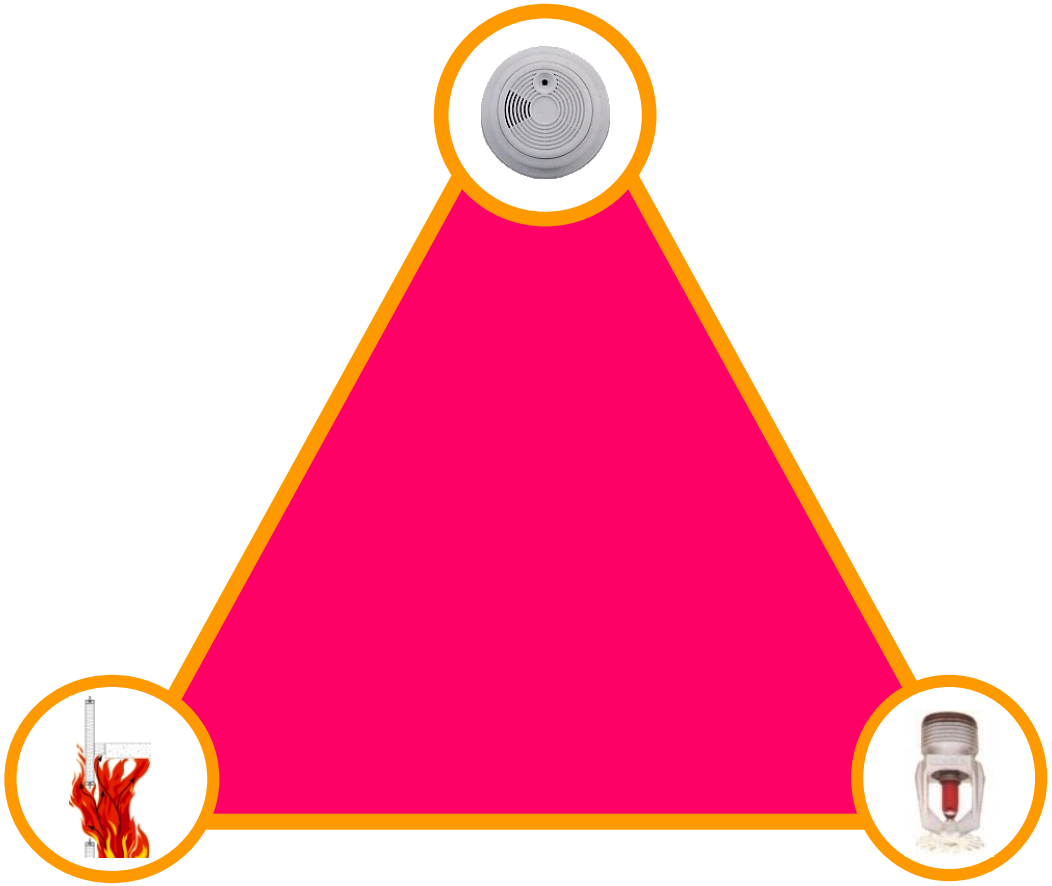

What do the Building Codes say?

- The current model building codes are very specific about addressing the protection requirement for the **intersection of the floor assembly & exterior curtain wall.**

Building Codes

International Building Codes 2015

Section 705.8.5 Vertical Separation of Openings

Openings in exterior walls in adjacent stories **shall be separated vertically** to protect against fire spread on the exterior of the buildings where the openings are within 5 feet (1524mm) of each other horizontally and the opening in the lower story is not a protected opening with a fire protection rating of not less than ¾ hour. **Such openings shall be separated vertically at least 3 feet** (914mm) by spandrel girders, exterior walls or other similar assemblies that have a fire-resistance rating of at least 1 hour **or by flame barriers that extend horizontally at least 30 inches (762mm) beyond the exterior wall**. Flame barriers shall have a fire-resistance rating of not less than 1 hour.

Exceptions:

1. This section shall not apply to buildings that are three stories or less above grade plane.

2. This section shall not apply to buildings equipped throughout with an automatic sprinkler system in accordance with section 903.3.1.1 or 903.3.1.2.

3. This section shall not apply to open parking garages.

705.8.5 basically tells you that you have to have a minimum 3' spandrel between openings but allows for exceptions

Building Codes

International Building Codes 2015

Section 715.4 Exterior Curtain Wall/Floor Intersection

Where fire resistance-rated floor or floor/ceiling assemblies are required, **voids created at the intersection of the exterior curtain wall assemblies and such floor assemblies shall be sealed with an *approved* system** to prevent the **interior spread** of fire. **Such systems shall be securely installed and tested in accordance with ASTM E2307 to provide an F rating for a time period not less than the fire- resistance rating of the floor assembly.** Height and fire-resistance requirements for curtain wall spandrels shall comply with Section 705.8.5.

Exception:

Voids created at the intersection of the exterior curtain wall assemblies and such floor assemblies **where the vision glass extends to the finished floor level shall be permitted to be sealed with an approved material to prevent the interior spread of fire.** Such material shall be securely installed and capable of preventing the passage of flame and hot gases sufficient to ignite cotton waste where **subjected to ASTM E 119 time-temperature fire conditions** under a minimum positive pressure differential of 0.01 inch (0.254 mm) of water column (2.5 Pa) for the time period equal to the fire-resistance rating of the floor assembly.

Note: this is not an approved system, it does not carry any hourly rating, it only satisfies our building code. A shadowbox into the curtainwall may be preferred so a PFC system is incorporated. Same design intent but create a much safer wall assembly.

Building Codes

International Building Codes 2015

Section 715.5 Spandrel Wall

In 2006, in order to try and eliminate the confusion over section 705.8.5, a new section was added:

Height and fire-resistance requirements for curtain wall spandrels shall comply with Section 705.8.5. **Where Section 705.8.5 does not require a fire-resistance-rated spandrel wall, the requirements of Section 715.4 shall still apply to the intersection between the spandrel wall and the floor.**

Section 715.4.1

Voids created at the intersection of exterior curtain wall assemblies and nonfire-resistance-rated floor or floor/ceiling assemblies **shall be sealed with an approved material or system to retard the interior spread of fire and hot gases between stories.**

In 2006, in order to try and eliminate the confusion over section 705.8.5, a new section was added

Building Codes - Canada

Canadian National Building Code

3.1.8.3. Continuity of Fire Separations

4) The continuity of a fire separation shall be maintained where it abuts another fire separation, a floor, a ceiling, a roof, or an exterior wall assembly. (See Note A-3.8.3.(4).)

A-3.1.8.3.(4) Fire Separation Continuity. The continuity of a fire separation where it abuts against another fire separation, a floor, a ceiling or an exterior wall assembly is maintained by filling all openings at the juncture of the assemblies with a material that will ensure the integrity of the fire separation at that location.

- **Many US architects do work in Canada**
- **Canada does not reference ASTM E2307 but does speak to continuity of fire separations**

Dynamics of Vertical Fire Spread

- Leap frog is not identified in codes yet. An new ASTM is created in 2019. This took 15 years. Still in progress to be in codes.

- Recently to assist architects in evaluating leap-frog risk, a new testing method—ASTM E2874-19, Standard Test Method for Determining the Fire-Test Response Characteristics of a Building Spandrel-Panel Assembly Due to External Spread of Fire, developed by ASTM Subcommittee E05.11 was recently introduced.

- The new test method provides for measurements and evaluations as outlined in the following sections:

    - 5:1.1 The ability of the spandrel-panel assembly to resist the passage of flames or hot gases sufficient to ignite a cotton pad, or be visible to an observer.

    - 5.1.2 Transmission of heat through, and above, the spandrel-panel assembly using heat flux and unexposed surface temperature measurements

ASTM E 119 Temperature Curve

6 minutes

1050° F
Glass-fiber insulation melts.

790° F
Zinc melts.

450° F
Cellulose pyrolyzes.

392° F
Spray Foam flash point.

300° F
Rigid foam melts.

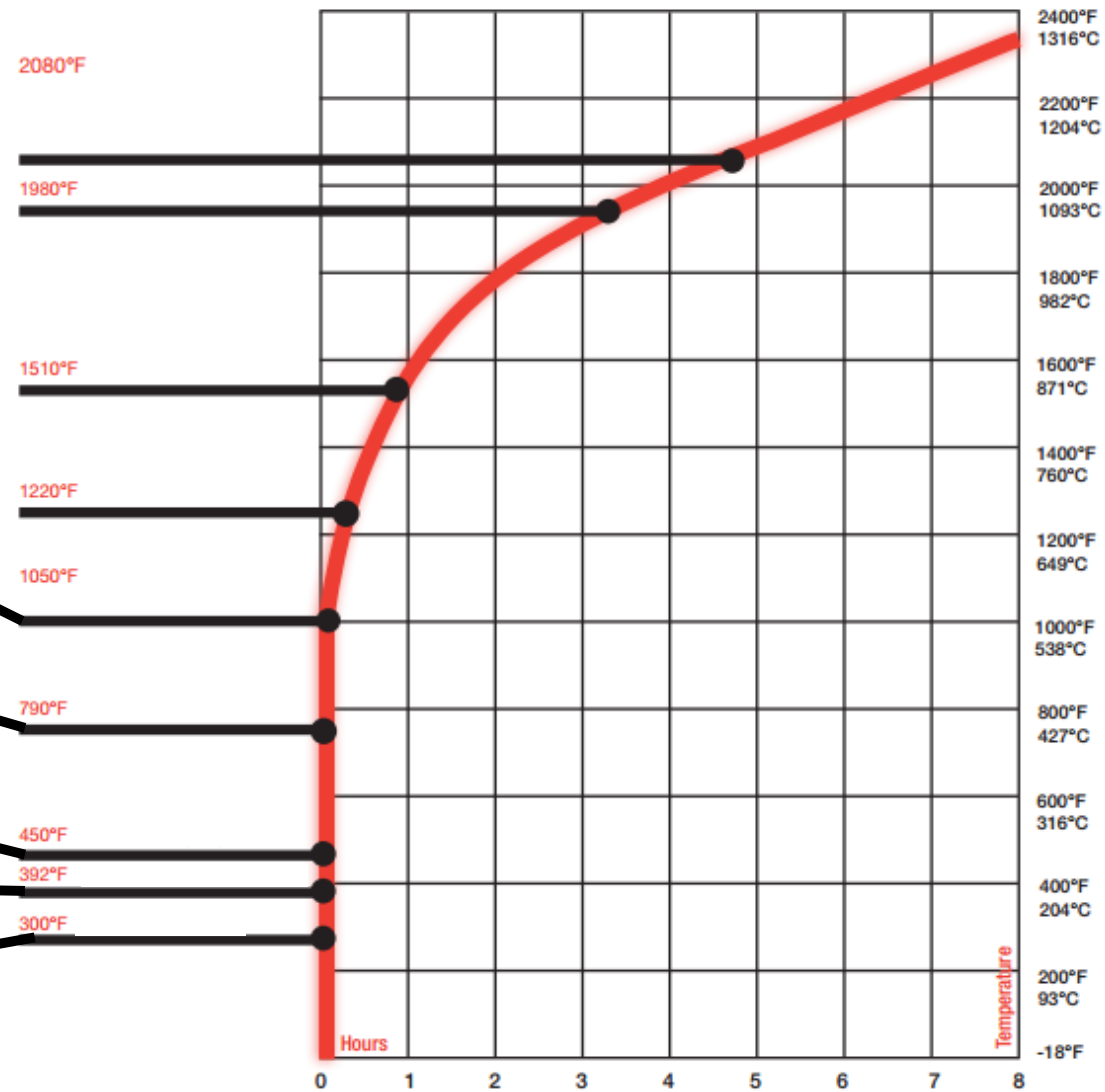

(1) Not for service operation at this temperature. Refer to the appropriate Thermafiber Insulation literature which states recommended maximum service temperature limits of individual products.
Time-temperature curve from "Standard of Methods of Fire Tests of Building Constructions and Materials." (ASTM E119-81)

Fire Performance Testing of Common Insulations - 1987

Fig. 1. Face of full-scale, permanent, fire-test facility at USG Corporation Research Center is set up for curtain wall fire test. Metal frame supports thermocouples for measuring flame plume temperature. Left side is "THERMAFIBER Curtain Wall Insulation Unit"; right side is "Glass Fiber Unit."

Fire Performance Testing of Common Insulations - 1987

Note: Before the actual ASTM E2307 test standard was developed

ASTM E 119 Temperature Curve

9 minutes

1220° F
Aluminum melts.

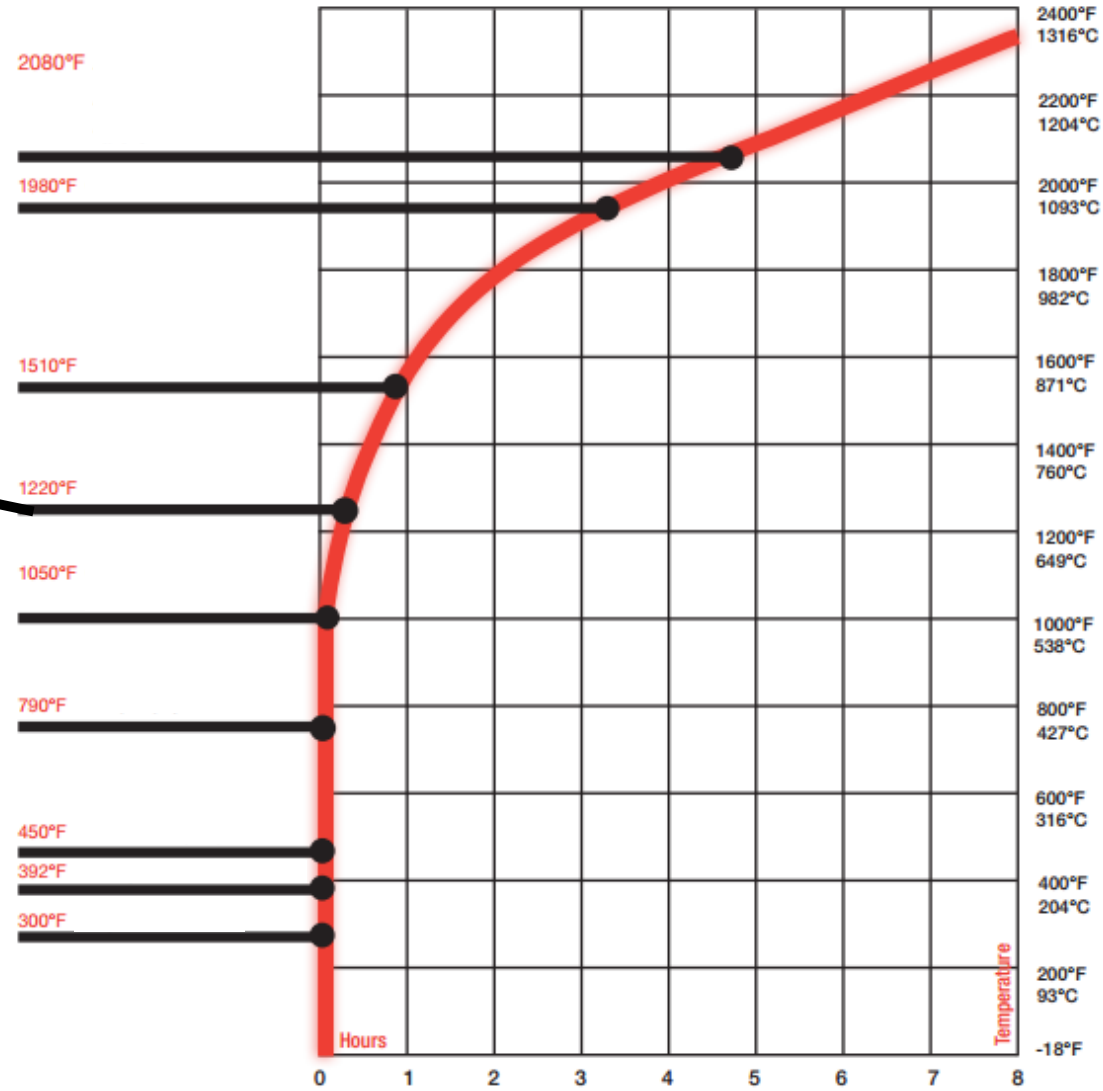

(1) Not for service operation at this temperature. Refer to the appropriate Thermafiber Insulation literature which states recommended maximum service temperature limits of individual products.
Time-temperature curve from "Standard of Methods of Fire Tests of Building Constructions and Materials." (ASTM E119-81)

Fire Performance

Mullions and Transoms before fire test

Horizontal Transom

Vertical Mullions

Fire Performance

Mullion exposure to fire test

Exposed side of vertical mullion almost completely melted out

Fire Performance

Transom exposure to fire test

Transom bending down 11 min. into test

Fire Performance

Mullions and Transoms after exposure to fire test

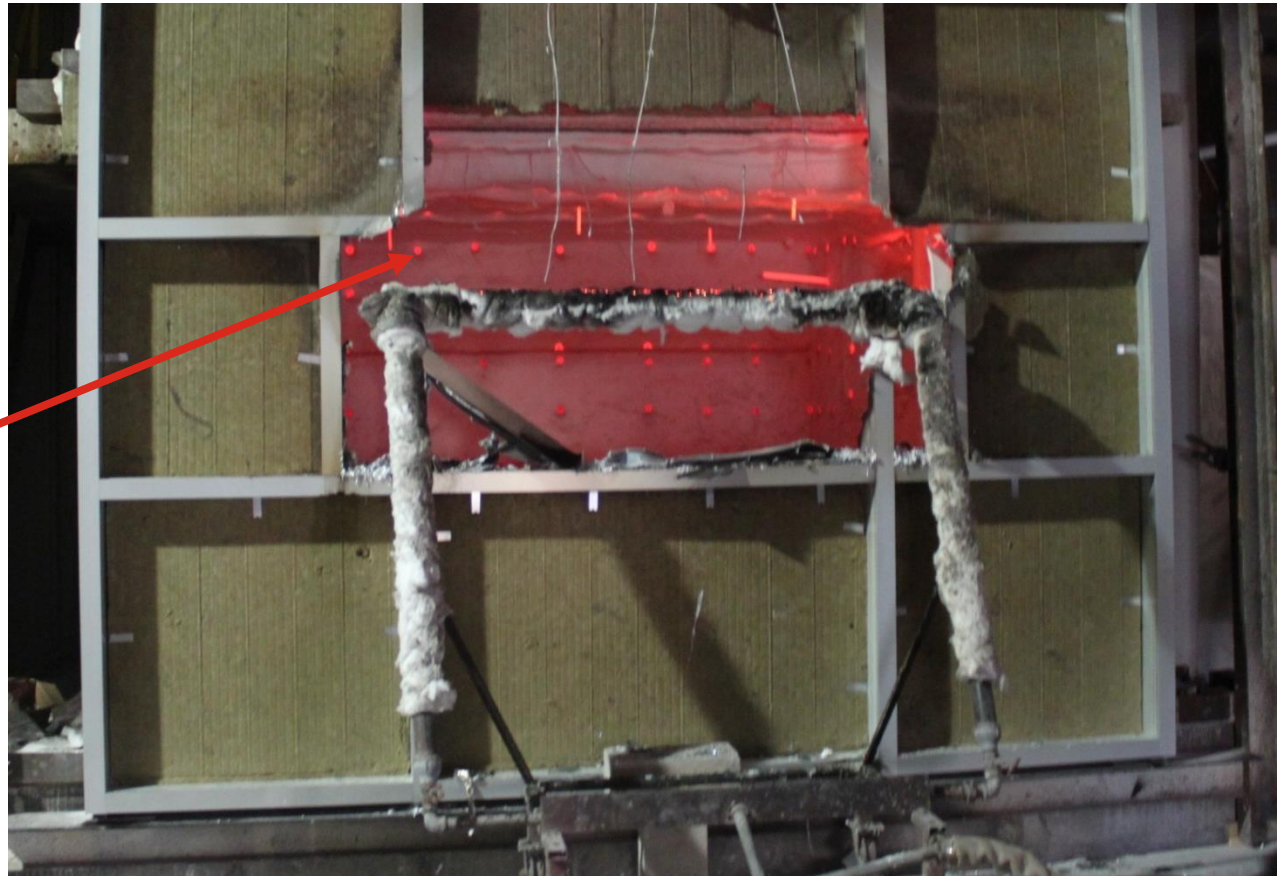

Complete loss of horizontal transom and vertical mullions

ASTM E 119 Temperature Curve

25 minutes

1510° F

Plate glass melts.

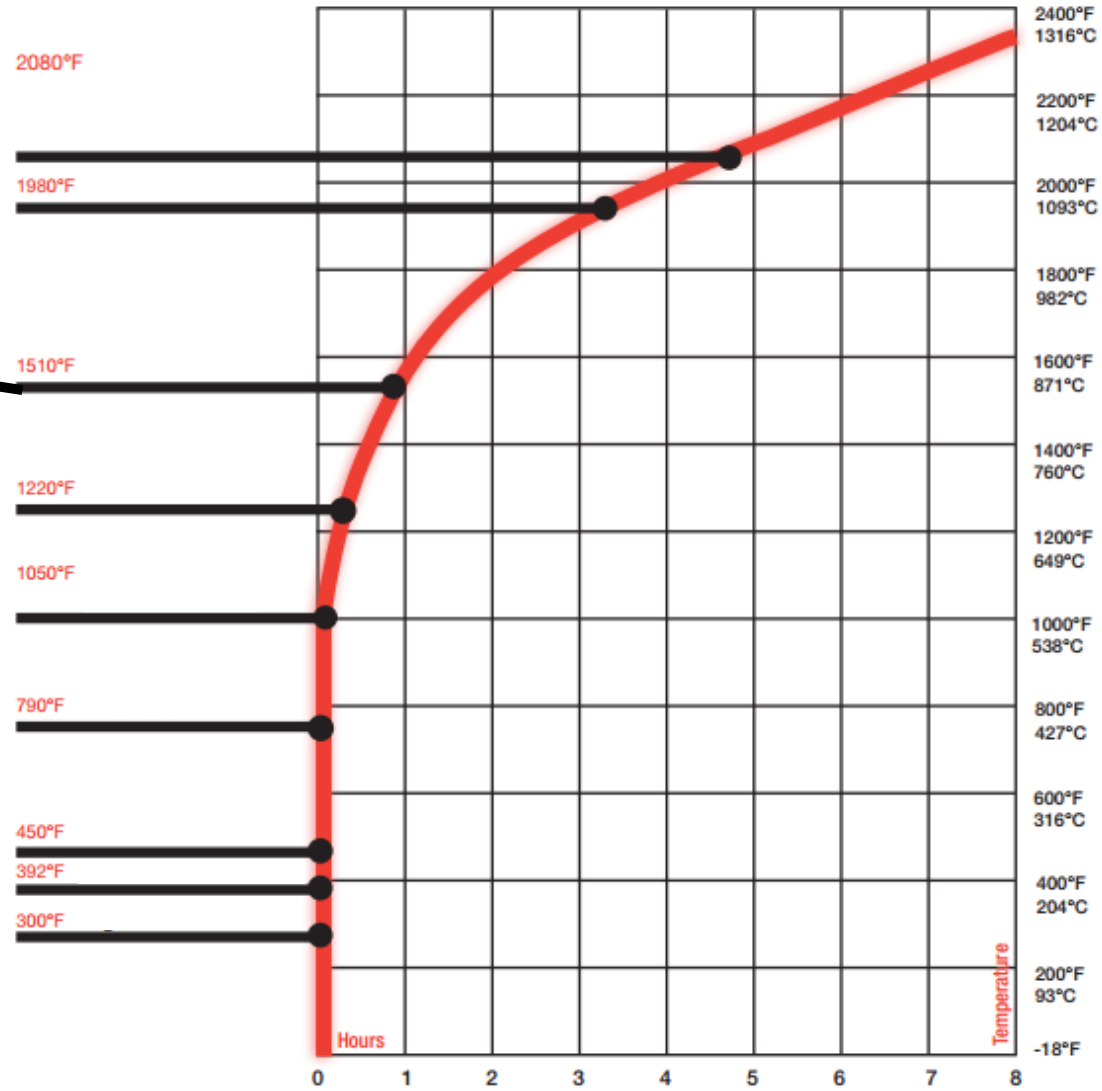

(1) Not for service operation at this temperature. Refer to the appropriate Thermafiber Insulation literature which states recommended maximum service temperature limits of individual products.
Time-temperature curve from "Standard of Methods of Fire Tests of Building Constructions and Materials." (ASTM E119-81)

Fire Performance

Glass breakage approximately 11 minutes into the fire test

Fire Performance

Glass breakage during an actual fire

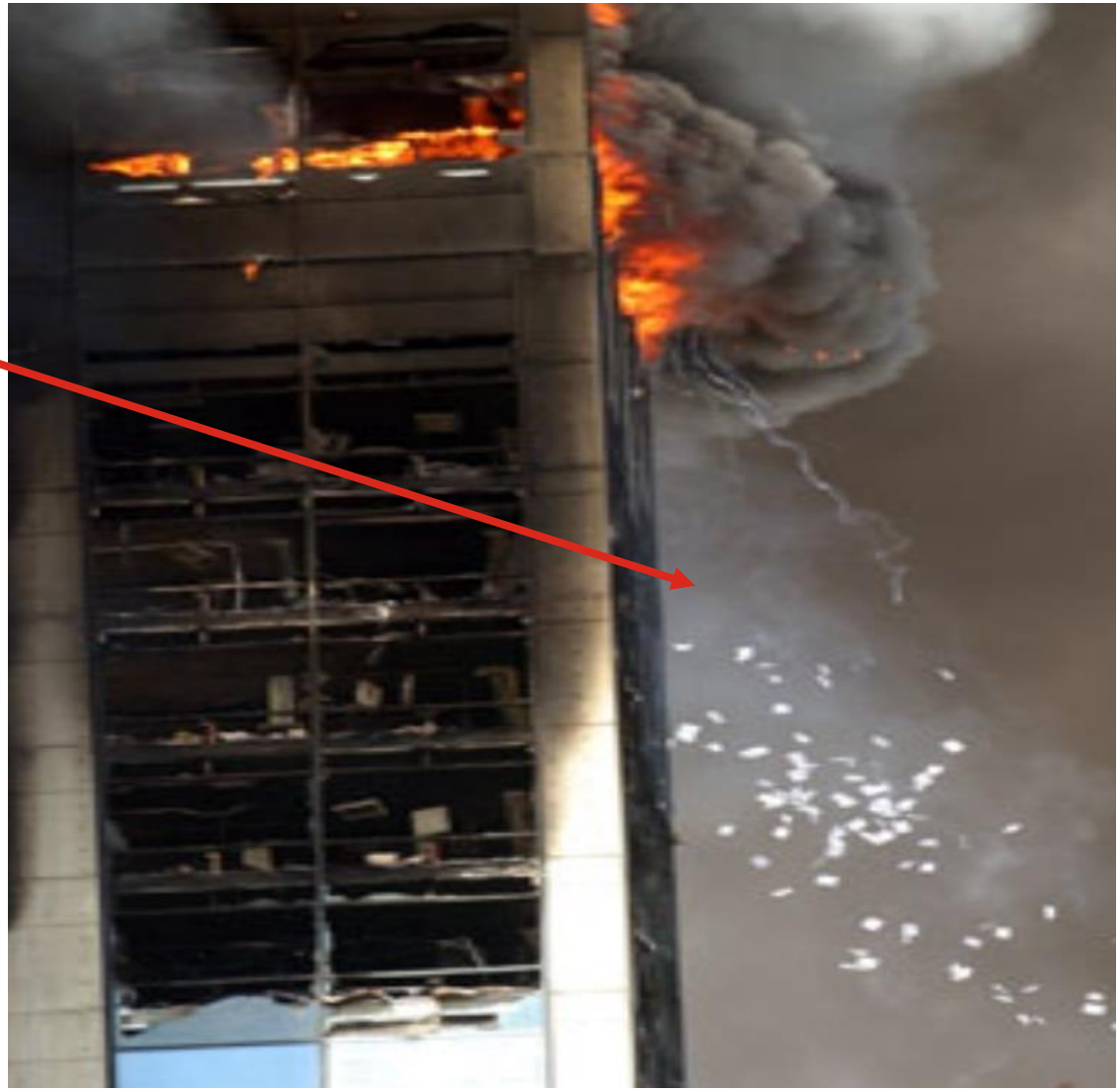

ASTM E 119 Temperature Curve

5 hours +

2080° F

At 5 hours, mineral wool insulation is still intact.
Test terminated without failure.

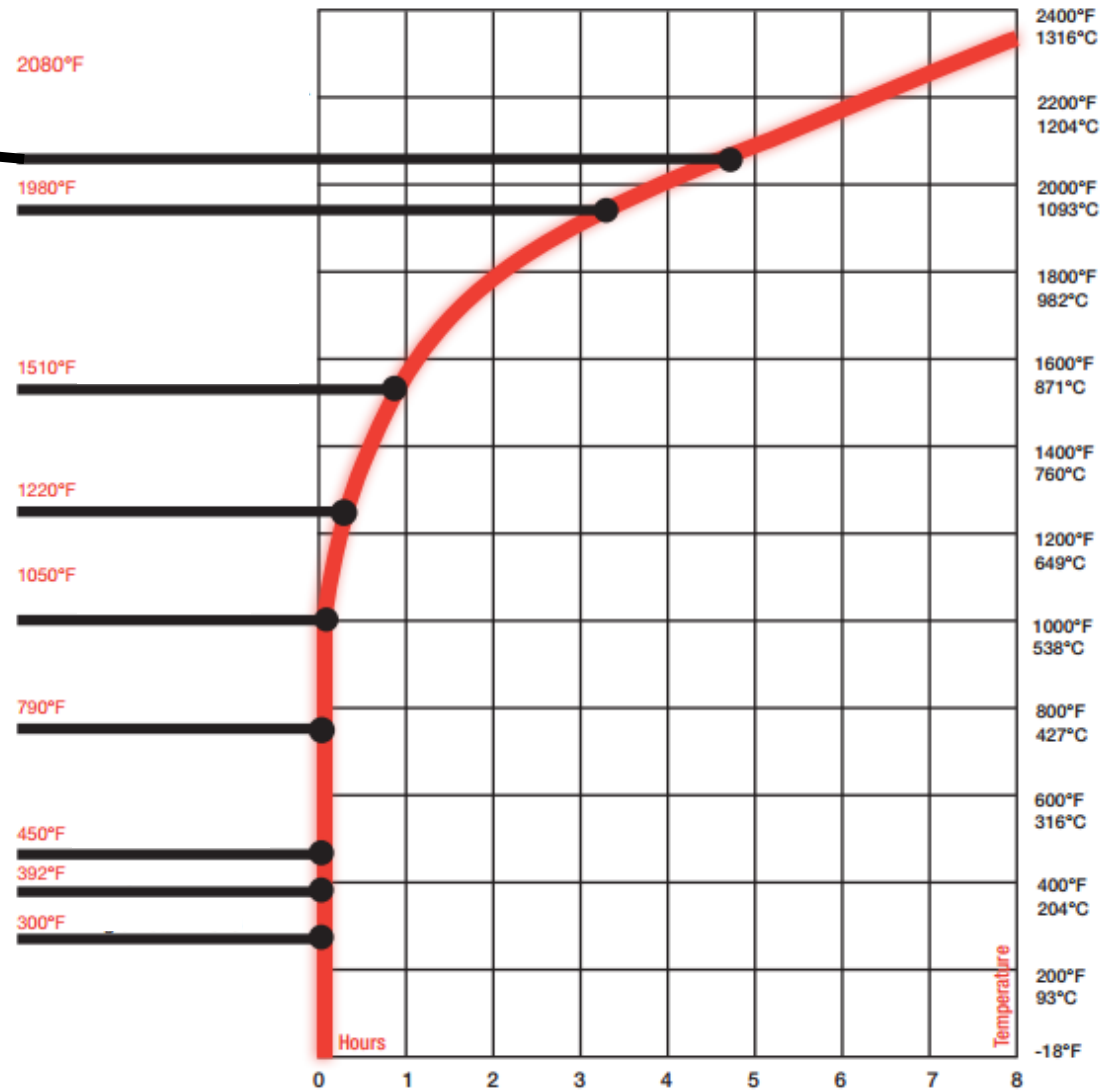

(1) Not for service operation at this temperature. Refer to the appropriate Thermafiber Insulation literature which states recommended maximum service temperature limits of individual products.
Time-temperature curve from "Standard of Methods of Fire Tests of Building Constructions and Materials." (ASTM E119-81)

Paths of Fire Propagation

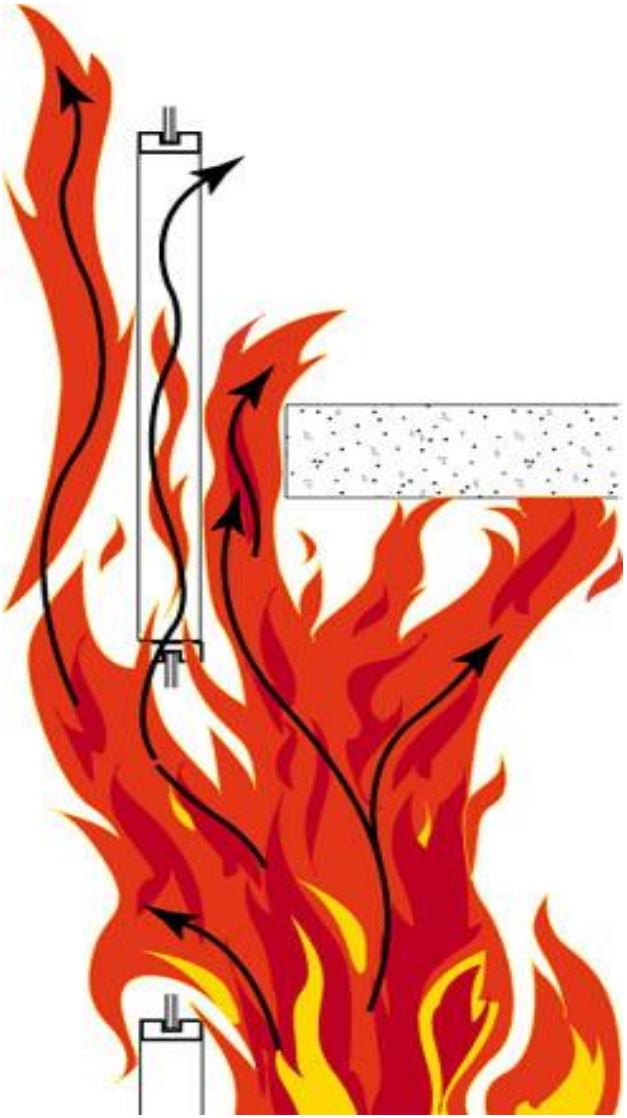

Let's look at how fire spreads at the perimeter of a building?

Paths of Fire Propagation

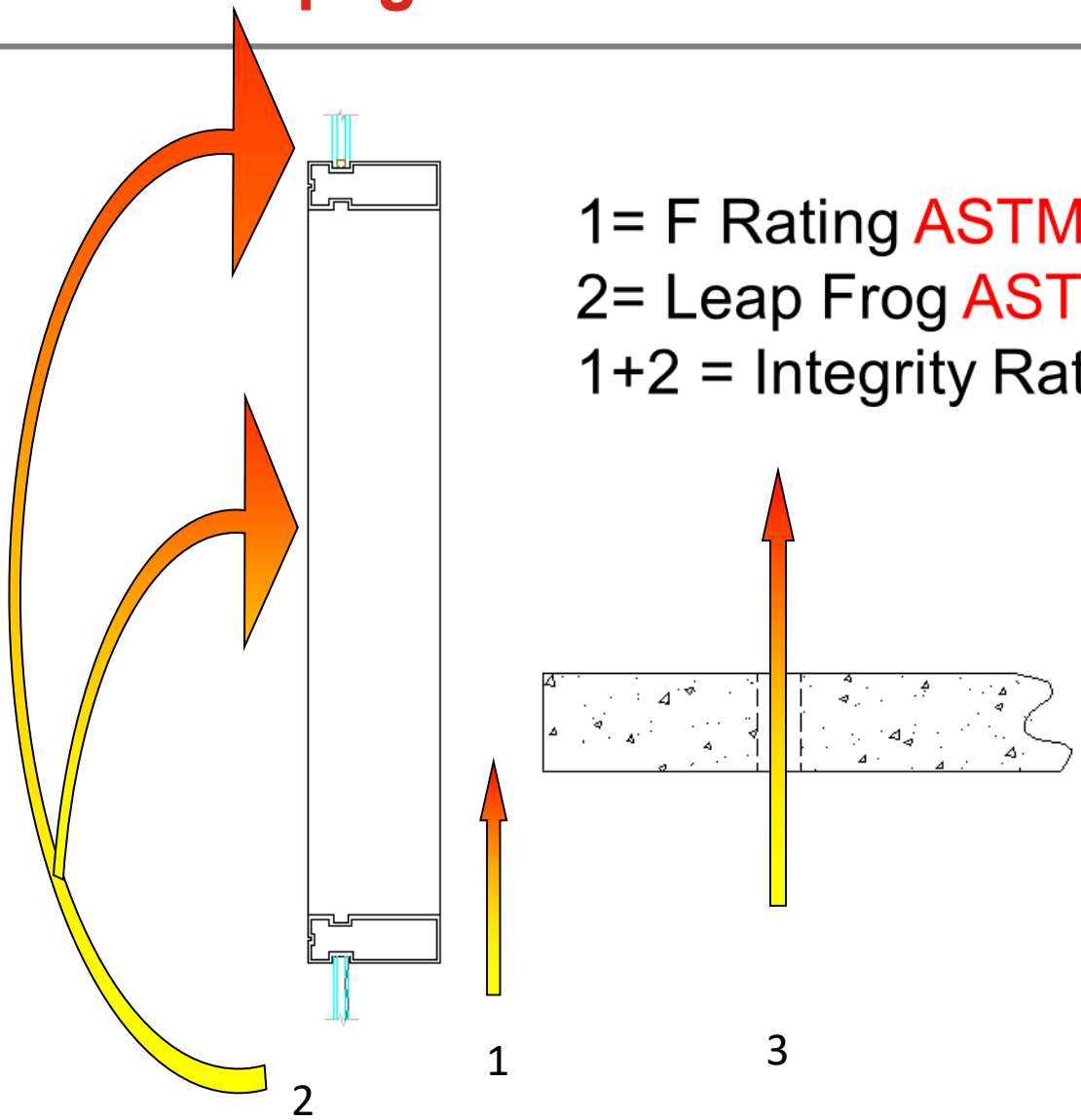

1= F Rating ASTM E2307
2= Leap Frog ASTM E2874
1+2 = Integrity Rating

ASTM E 2307

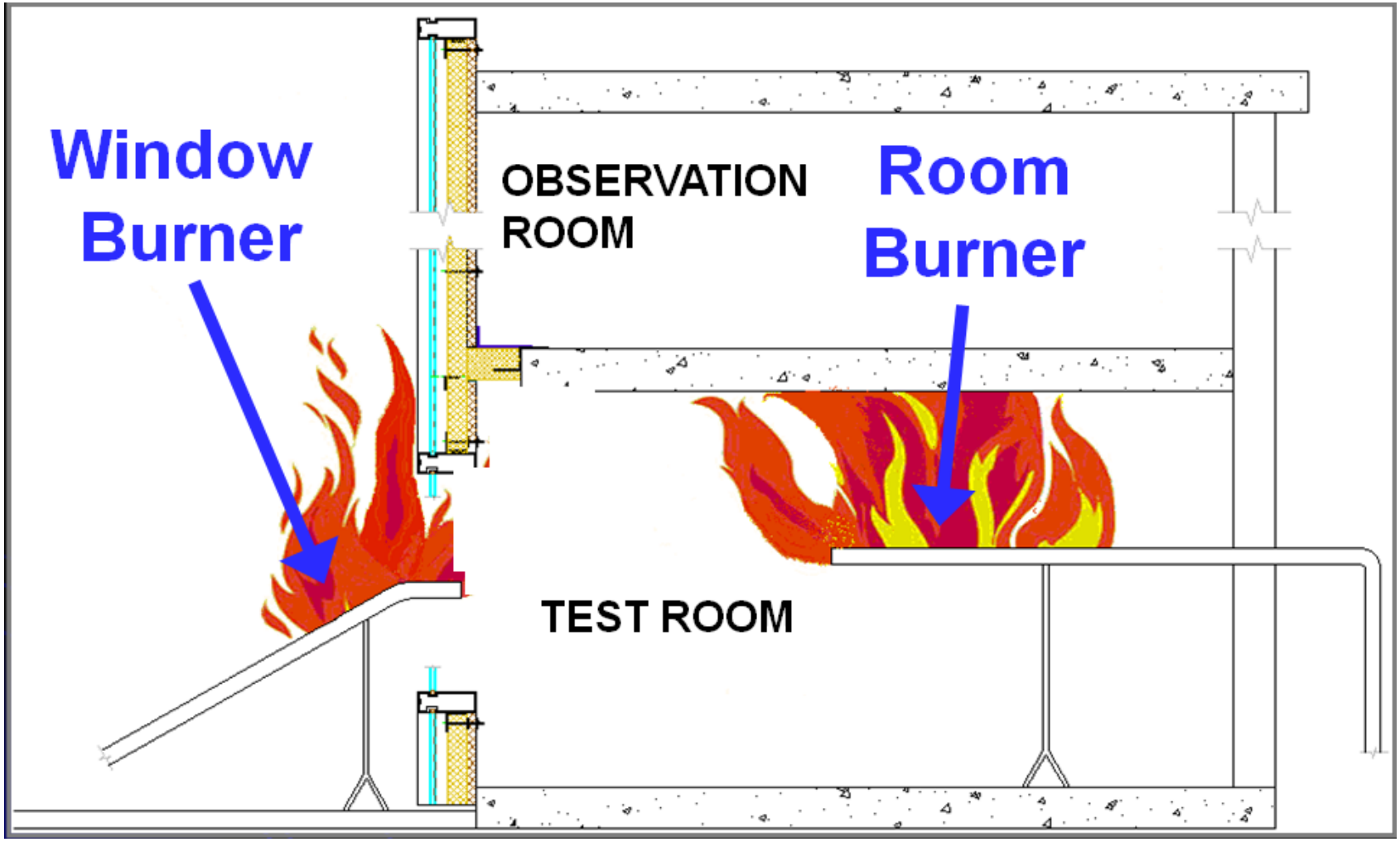

ASTM E 2307

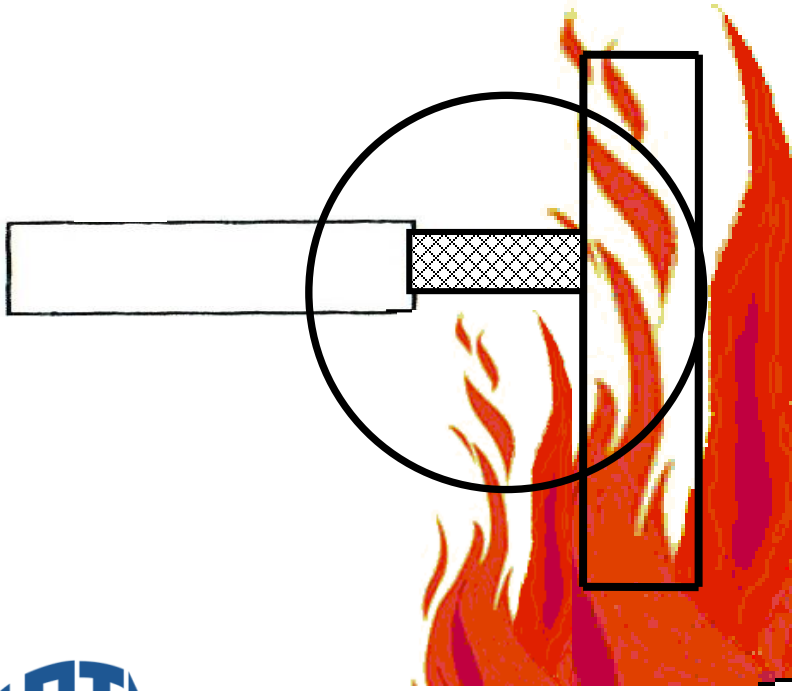

- ASTM E 2307 – Standard Test Method for Determining Fire Resistance of Perimeter Fire Barriers Using Intermediate-Scale, Multi-Story Test Apparatus.

- Evaluates the joint beginning at the face of the floor slab to the exterior curtain wall.

- Primary pass/fail criteria is holding the joint together. F-rating.

ASTM INTERNATIONAL
Standards Worldwide

ASTM E 2307

- These are photos of an actual test per ASTM E 2307.
- The first picture shows the assembly as the fire begins with ignition of the room burner. Testing was done by the Loss Prevention Council is an actual fire
- Vision glass breaking out 5 minutes into the test, the window burner is ignited, shown in the picture on the right

ASTM E 2307 – Result

• The aftermath of the fire shows the destruction caused by the flame and hot gases. Note the loss of the transom and mullions

Perimeter Fire Containment

How is a fire like this contained?

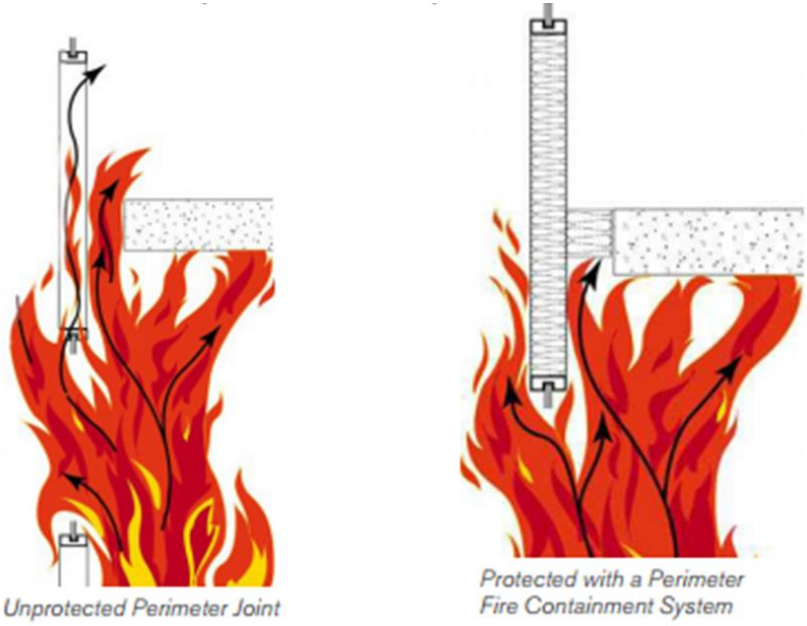

Perimeter Fire Containment

6 Basic Components of a Listed Perimeter Fire Containment Assembly

Perimeter Fire Containment

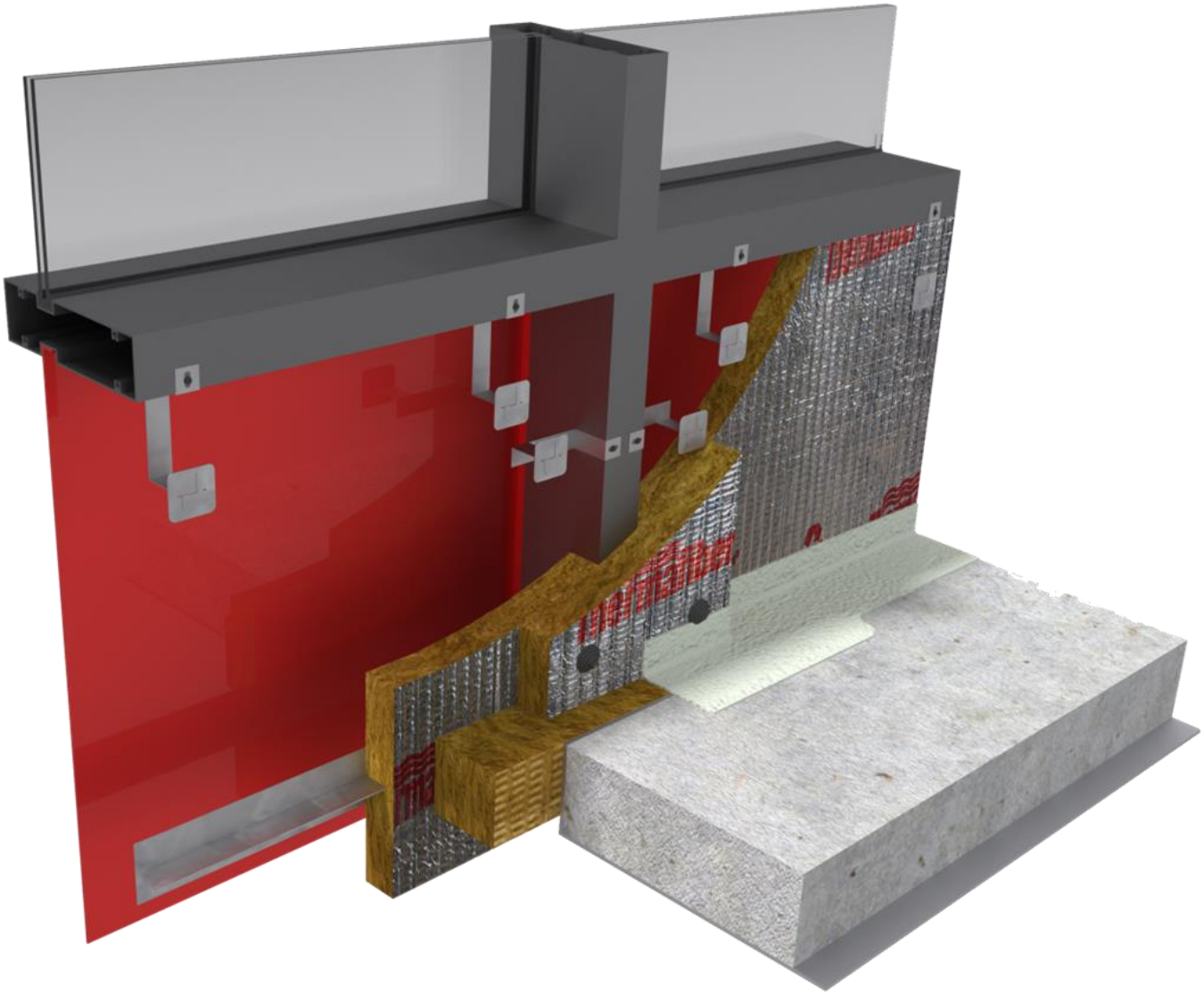

Perimeter Fire Containment

Design Criteria 1:

Reinforcement Member Mechanically Attached

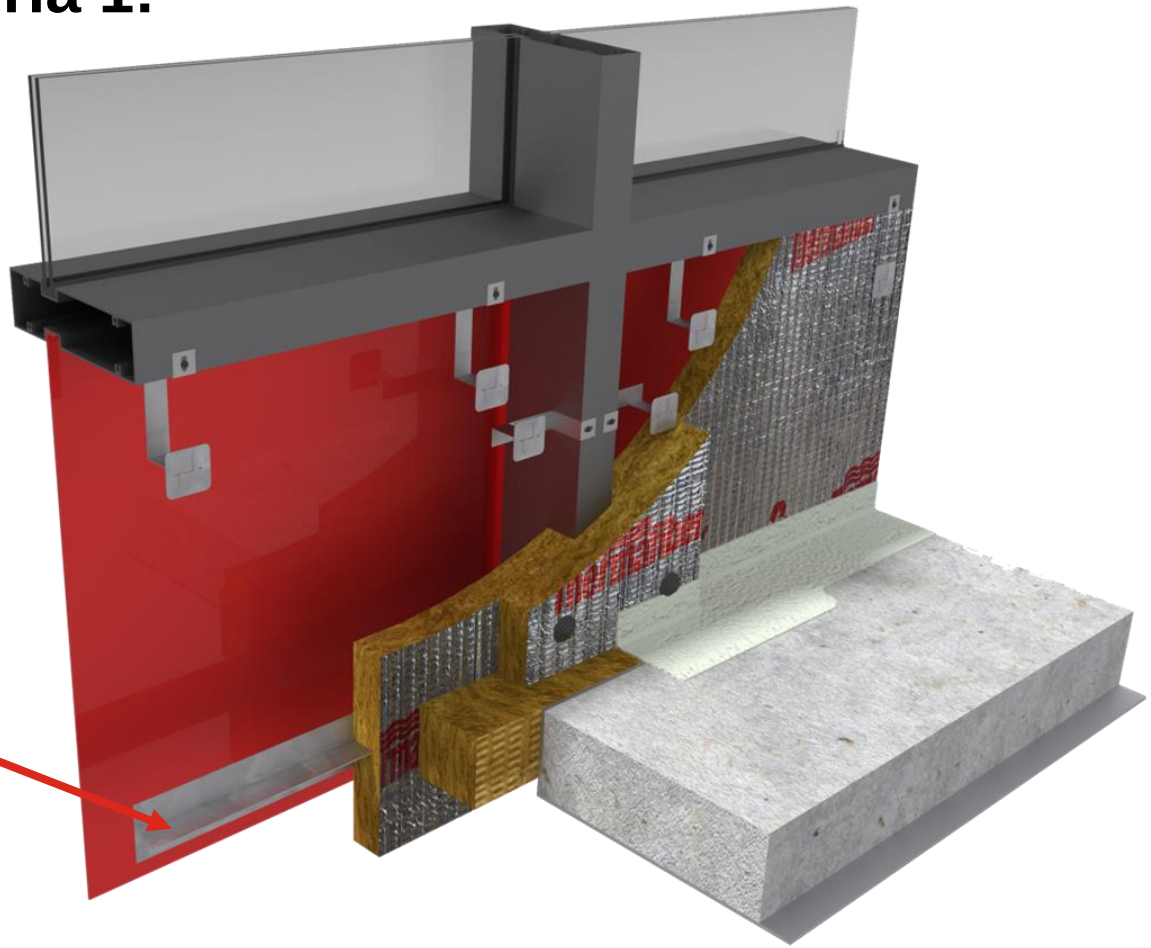

Perimeter Fire Containment

Design Criteria 2:

Spandrel
Mineral Wool
Insulation

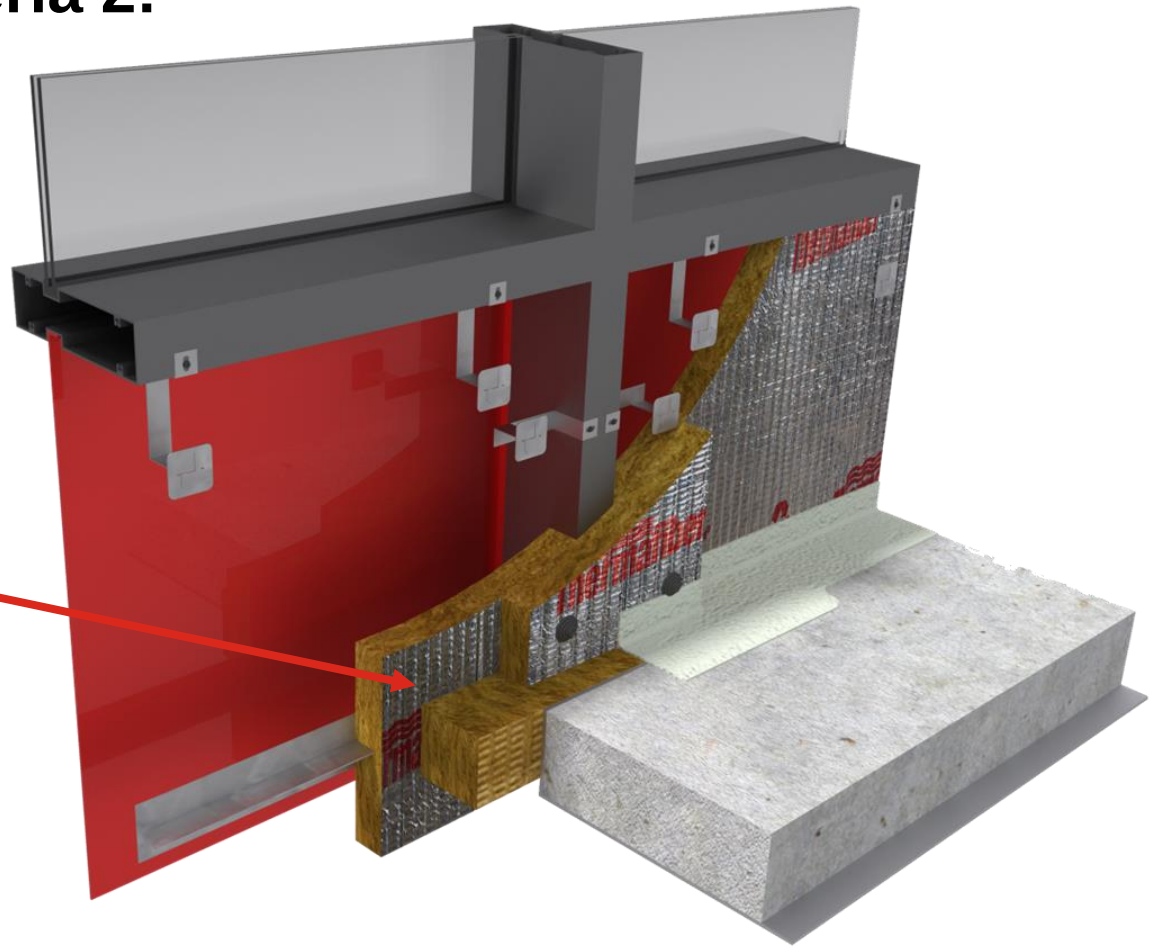

Perimeter Fire Containment

Design Criteria 3:

Mineral Wool Insulation - Mechanically Attached

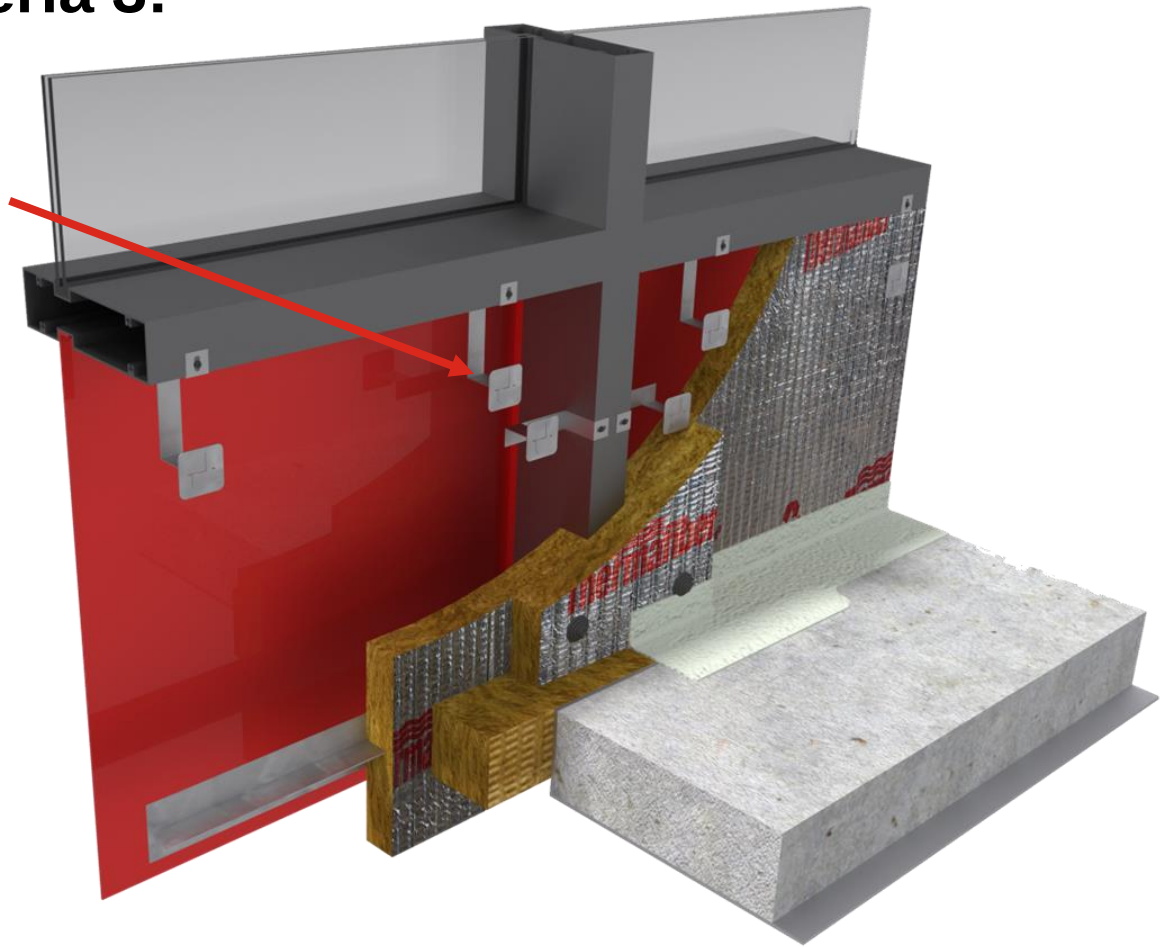

Perimeter Fire Containment

Design Criteria 4:

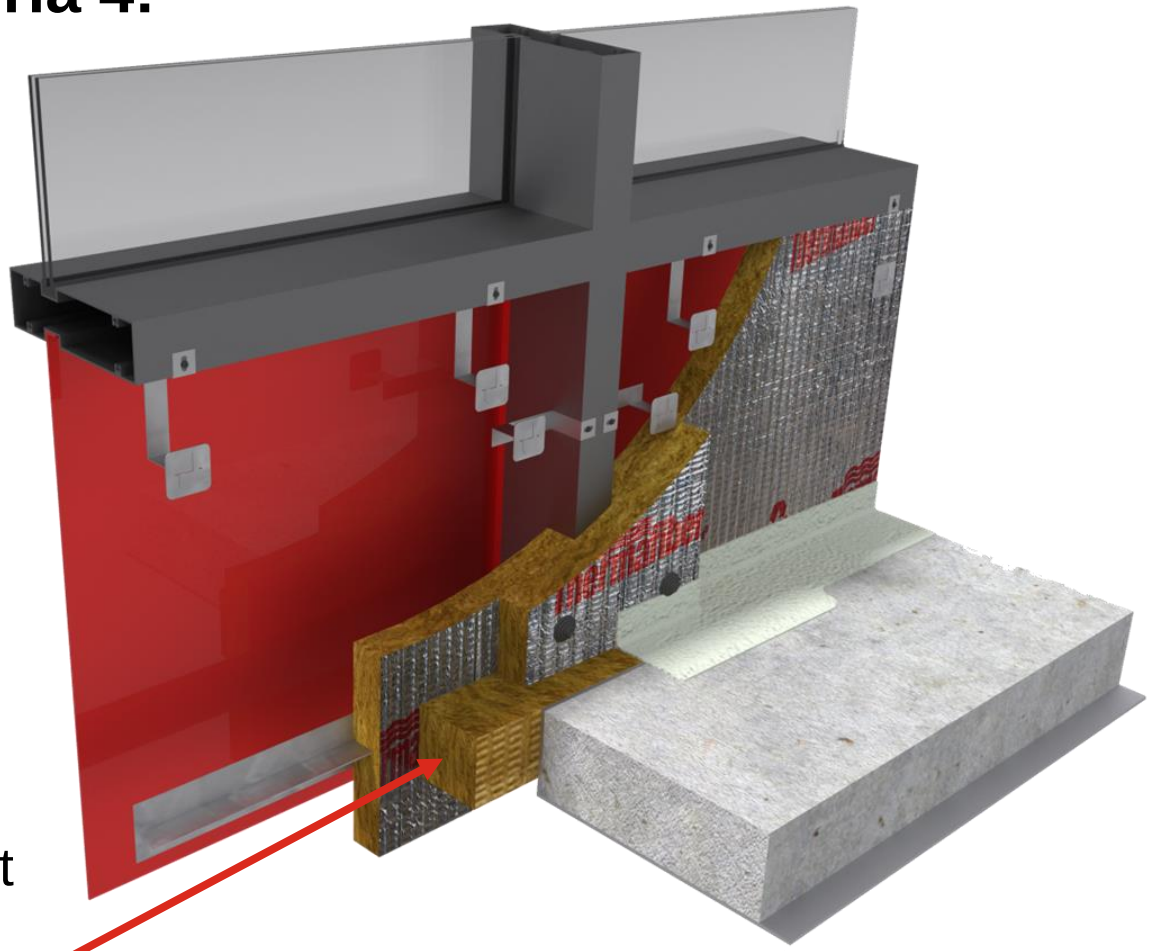

Compression Fit Safing
(direction of Safing as required per tested assembly)

Perimeter Fire Containment

Design Criteria 5:

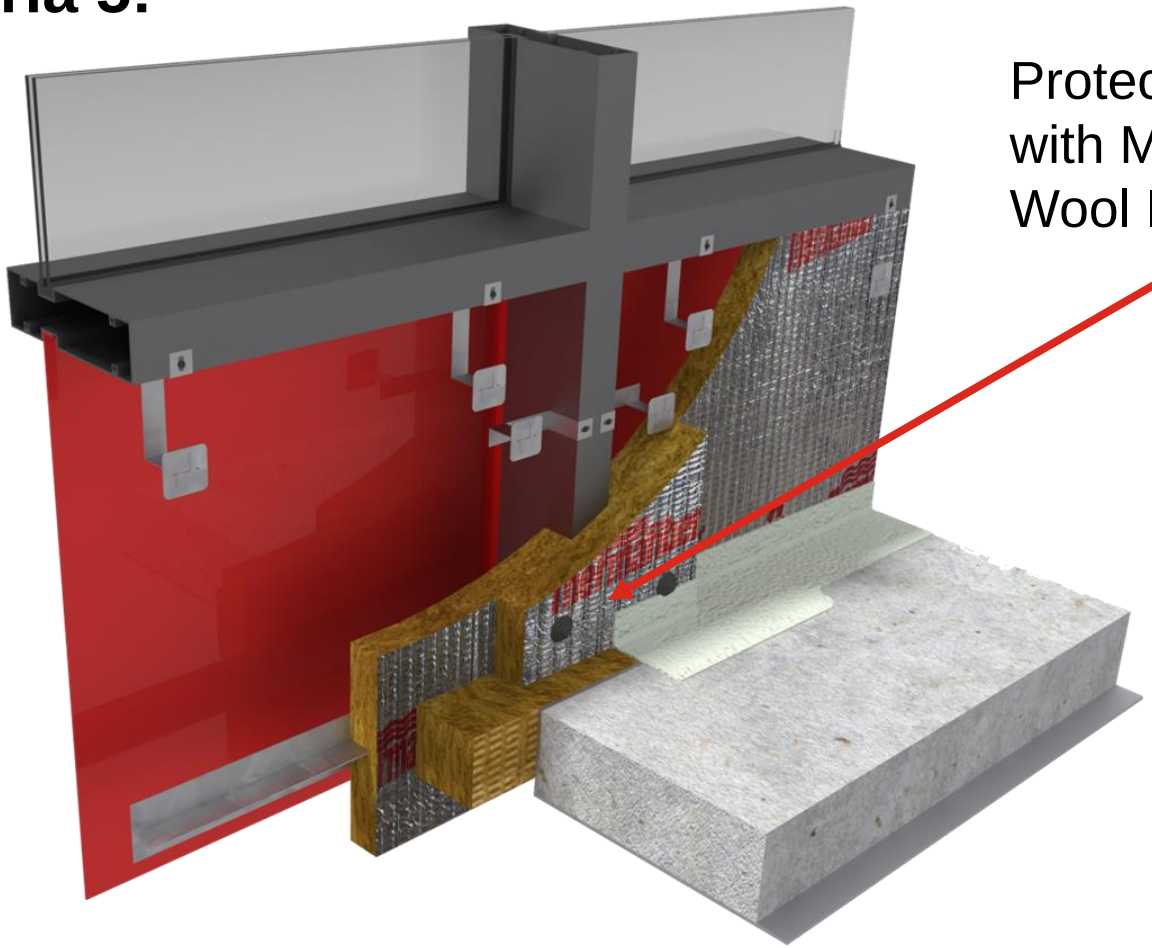

Protect Mullions with Mineral Wool Insulation

Smoke – The known killer

The major contributor of fire related deaths is smoke inhalation

Design Criteria 6: Smoke barrier applied over Safing insulation

Perimeter Fire Containment

Design Criteria 6:

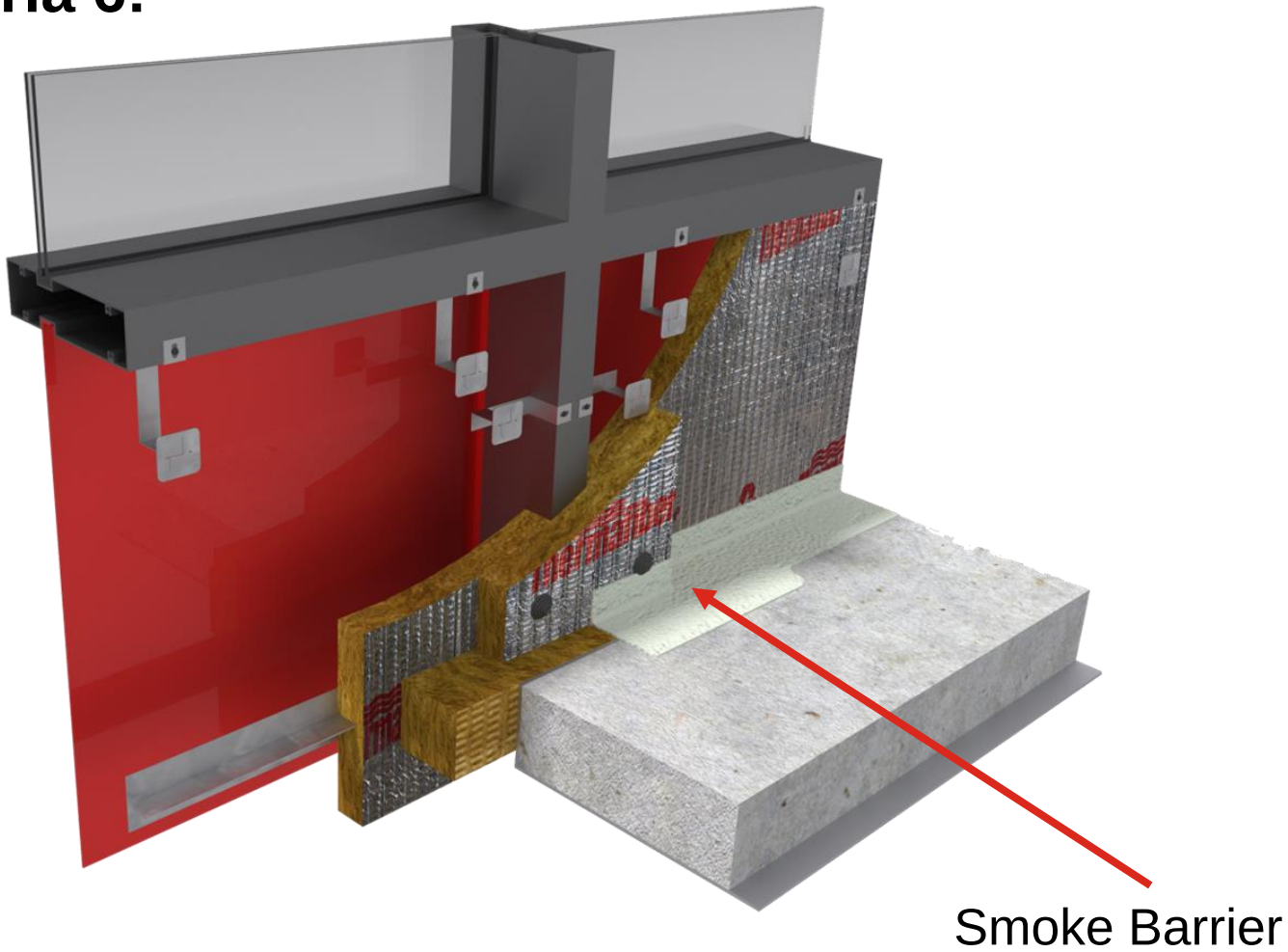

Perimeter Fire Containment

The 6 Basic Design Principles

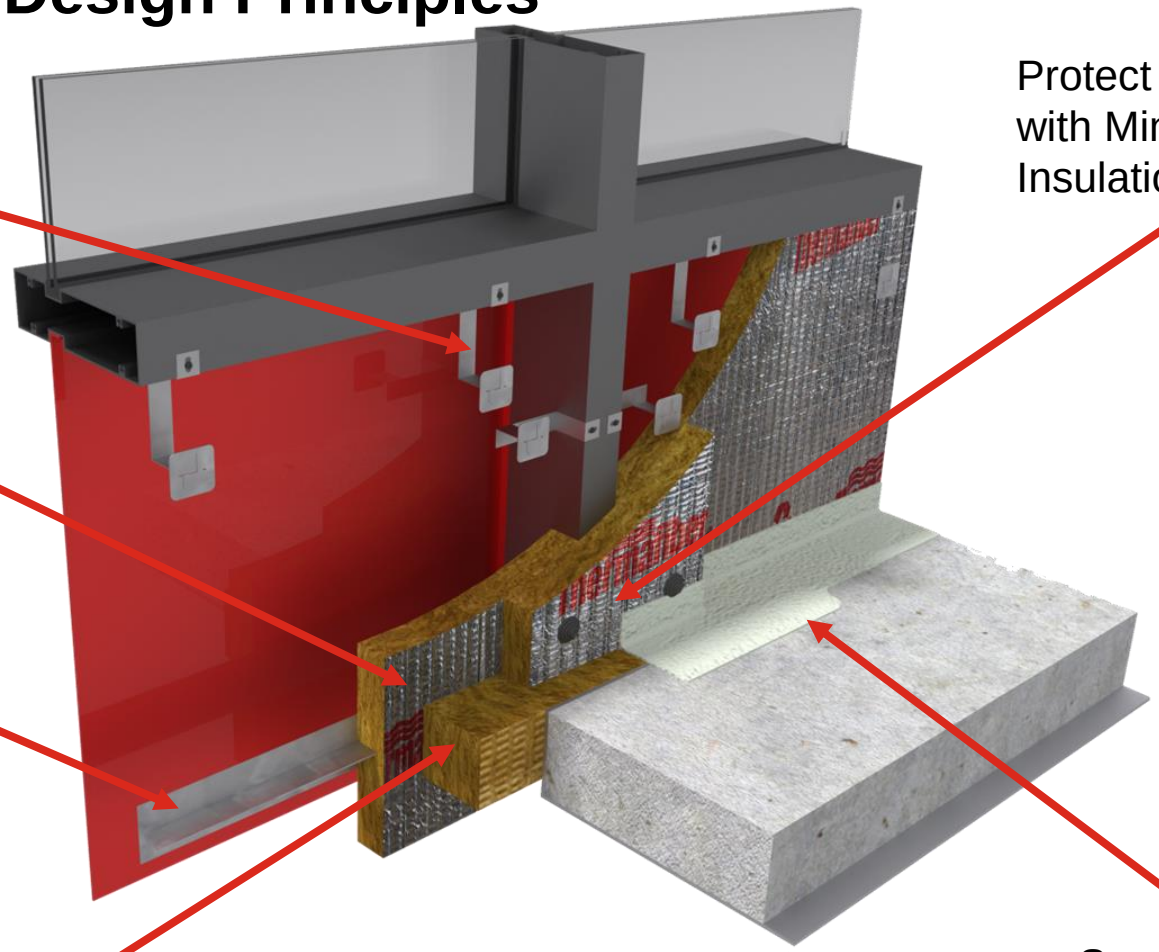

Mineral Wool Insulation - Mechanically Attached

Mineral Wool Insulation

Reinforcement Member Mechanically Attached

Compression Fit Safing
(direction of Safing as required per tested assembly)

Protect Mullions with Mineral Wool Insulation

Smoke Barrier

Perimeter Fire Containment

The Six Basic Components of Any Listed Perimeter Fire Containment System

1. Mineral Wool Insulation
2. Provide Backing/Reinforcement at the Safing Line
3. Mechanically Attached Curtain Wall Insulation
4. Compression-fit Safing Insulation
5. Protect Aluminum Mullions
6. For “Smoke Containment,” Apply a Smoke Barrier System
7. Protect Exposed Curtain Wall Anchor at the Safing Line

Unprotected Perimeter Joint

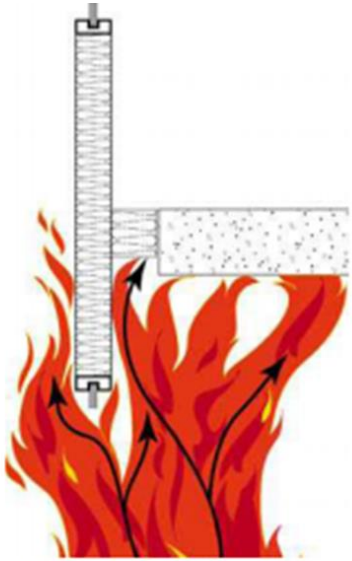

Protected with a Perimeter Fire Containment System

Installation

Installation

Installation

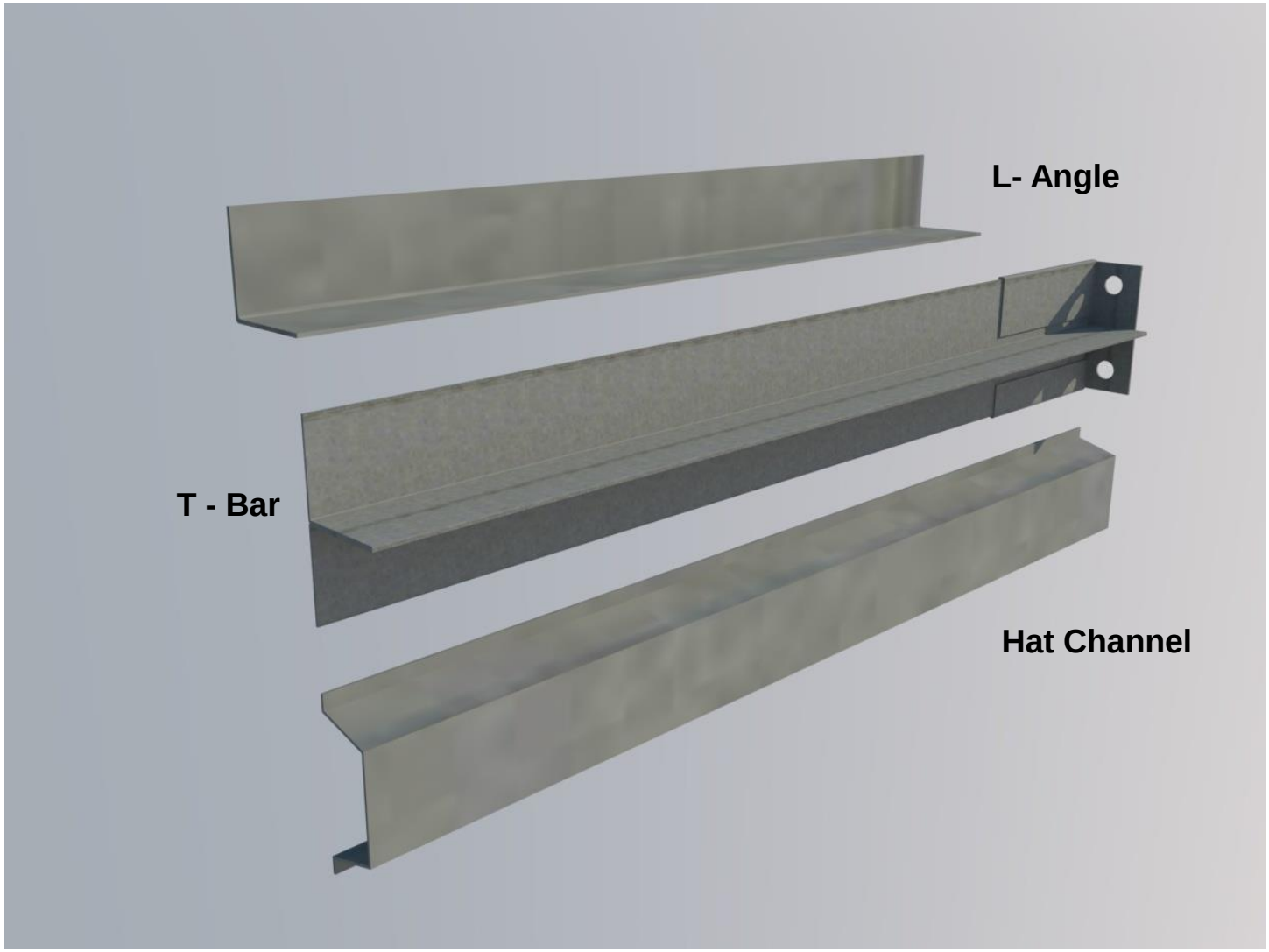

Installation

Installation

Installation – older style hangers

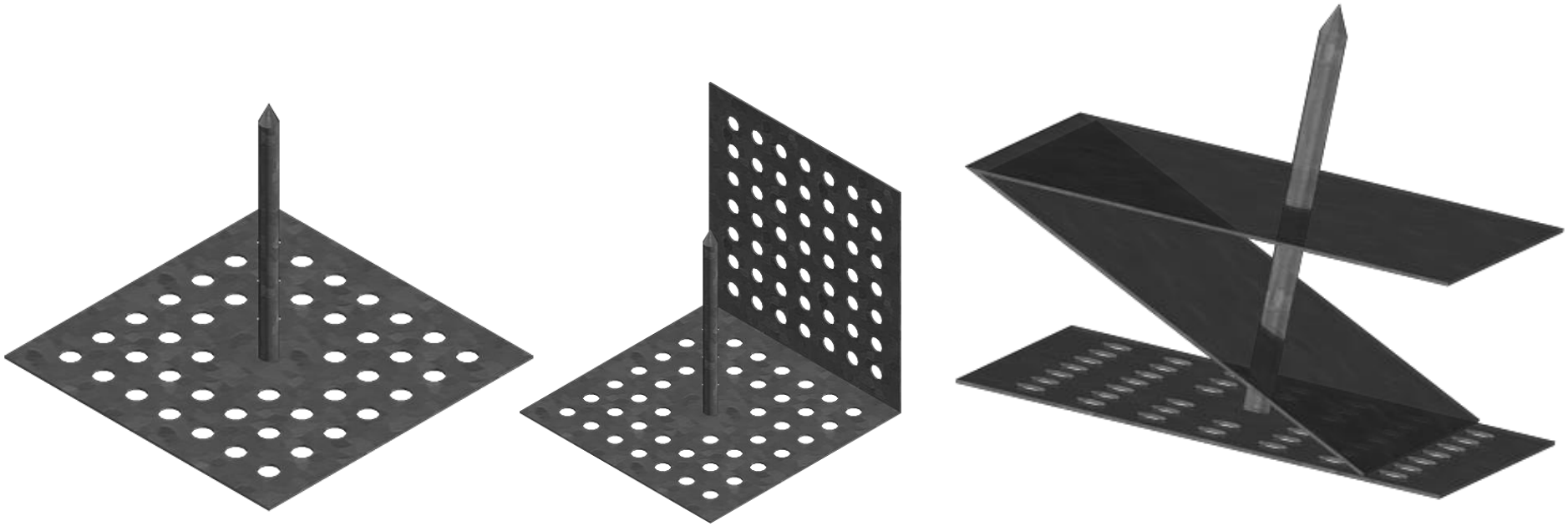

Can anyone tell me whether an adhesive backed stick pin would be acceptable in a perimeter fire containment system?

Installation – newer style hangers

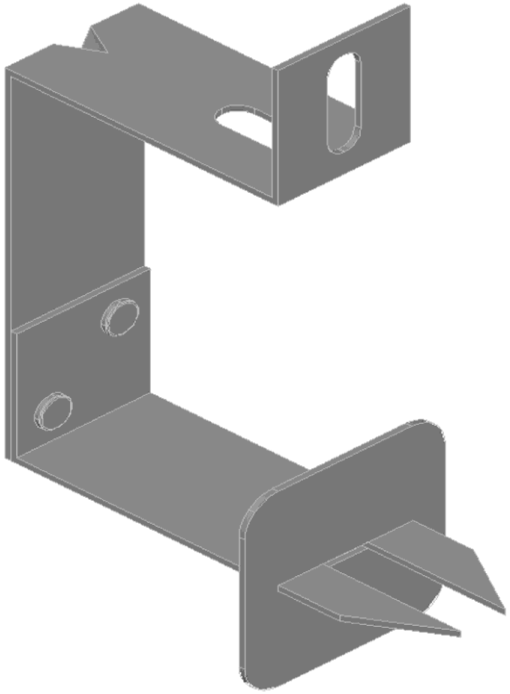

Horizontal Hanger

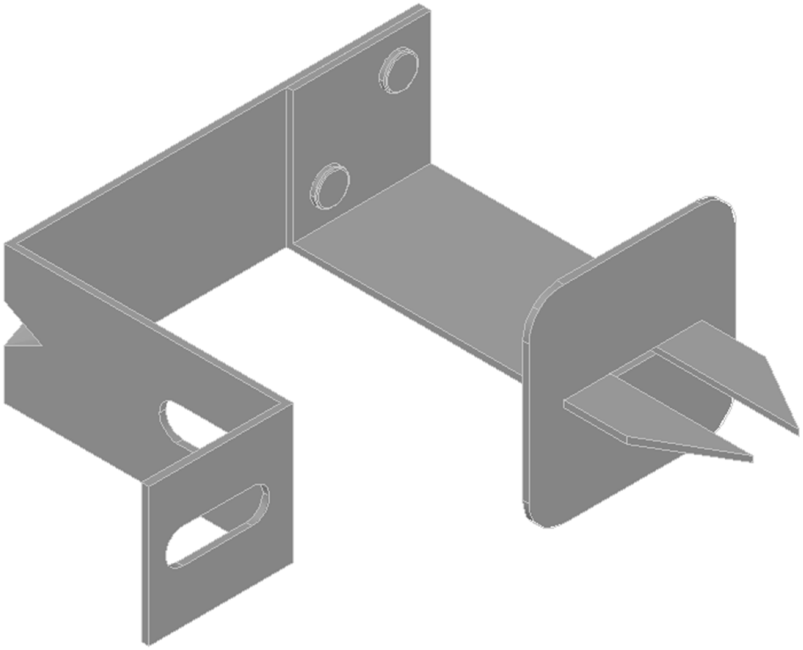

Vertical Hanger

Installation

Installation

Installation

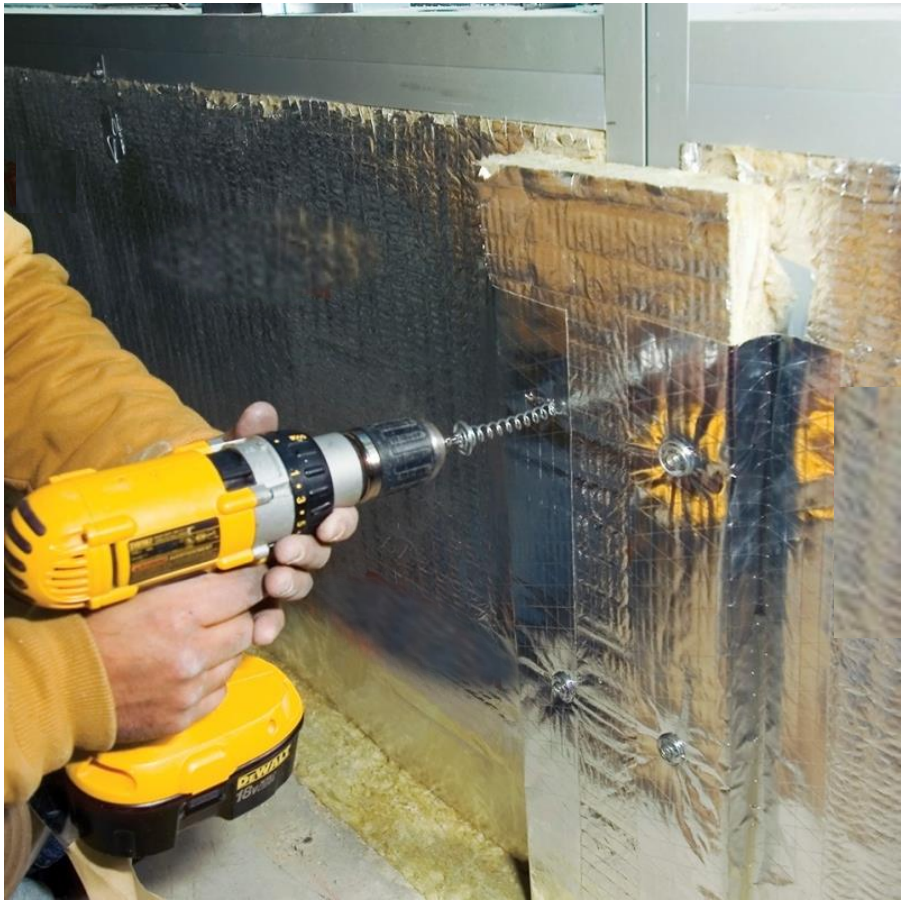

Installation

Understanding Perimeter Fire Containment Designs

Where are listed systems?

Within these two directories, there are **over 300 tested and listed** perimeter fire containment systems

Reading Designs

Intertek Design Nomenclature Example: TF-BPF-120-01*			
2-3 digit client reference	Code that ties to the CSI designation	Rating in minutes	Sequential number for design listing for particular client
TF (Thermafiber)	BPF (Building Perimeter Firestopping)	120	01
*see specific design for movement capabilities			

Reading Designs

UL Design Nomenclature Example: CW-D-1014 & CW-S-1001		
CW	D or S	XXXX
Curtain Wall	Dynamic or Static	Max Clearance Distance Between Curtain Wall & Floor 0000-0999 Less than or equal to 2 in. 1000-1999 Greater than 2 in. and less than or equal to 6 in. 2000-2999 Greater than 6 in. and less than or equal to 12 in.

Understanding Designs

Rating	Description	Code Requirement?
F Rating	the ability of the design to prevent flame and hot gasses from passing through the interior of the system between the edge of the slab and interior face of the CW.	Yes, per IBC section 715.4
Integrity Rating	Barrier to interior fire passage and leap frog	No, recognized as a design criteria by government agencies and the healthcare industry – to be added to IBC
L Rating- Hour	Measure of air leakage in CFM/Linear Ft. @ ambient & 400° F	
Insulation Rating-Hour	(Max temp rise not to exceed 325° F max individual or 250° F average above the starting temp on unexposed surface or 1" above)	

Movement Capabilities (Vertical Shear)

Movement Class	Min No. of Cycles	Min Cycling Rate (cycles per min)
Class I	500	1
Class II	500	10
Class III	100	30

Understanding Designs

F- Rating- Hour
Integrity Rating- Hour

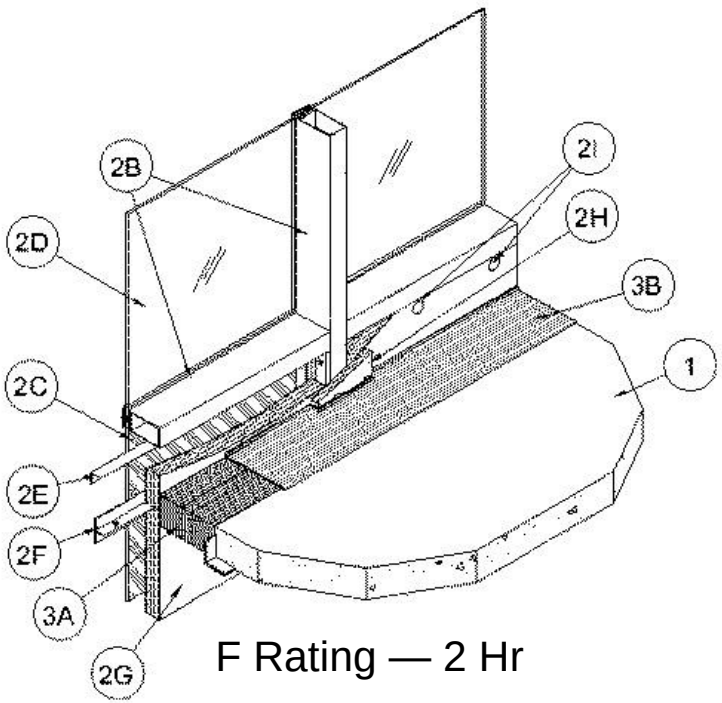

F Rating — 2 Hr

Integrity Rating — 0 Hr

(Interior Spread per ASTM E 2307)
(Interior Spread & Leap Frog)

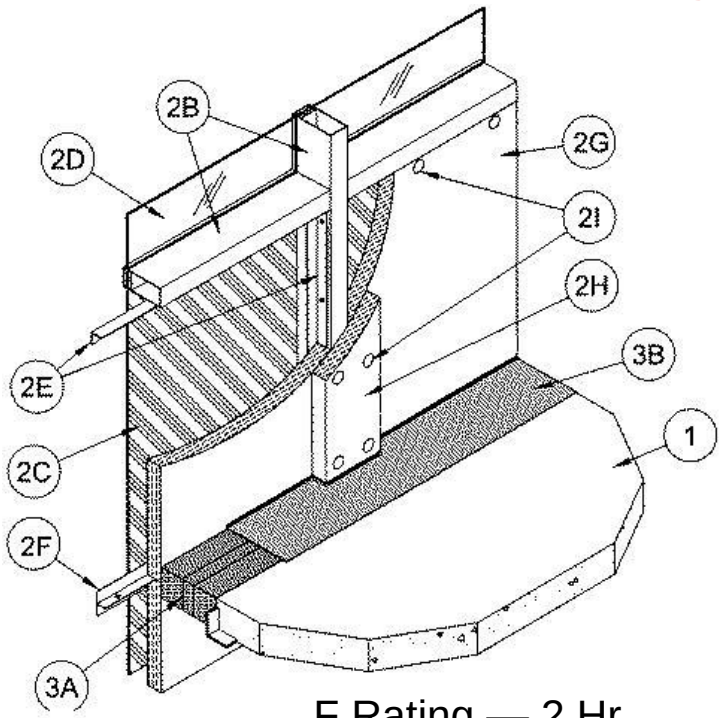

F Rating — 2 Hr

Integrity Ratings — 1-1/2 and 2 Hr
(determined by spandrel height)

To assist architects in evaluating leap-frog risk, a new testing method—ASTM E2874-19, Standard Test Method for Determining the Fire-Test Response Characteristics of a Building Spandrel-Panel Assembly Due to External Spread of Fire, developed by ASTM Subcommittee E05.11 was recently introduced." – Angie Ogino

https://www.buildingenclosureonline.com/articles/88529-a-new-testing-method-assesses-leap-frog-risk

Leap Frog

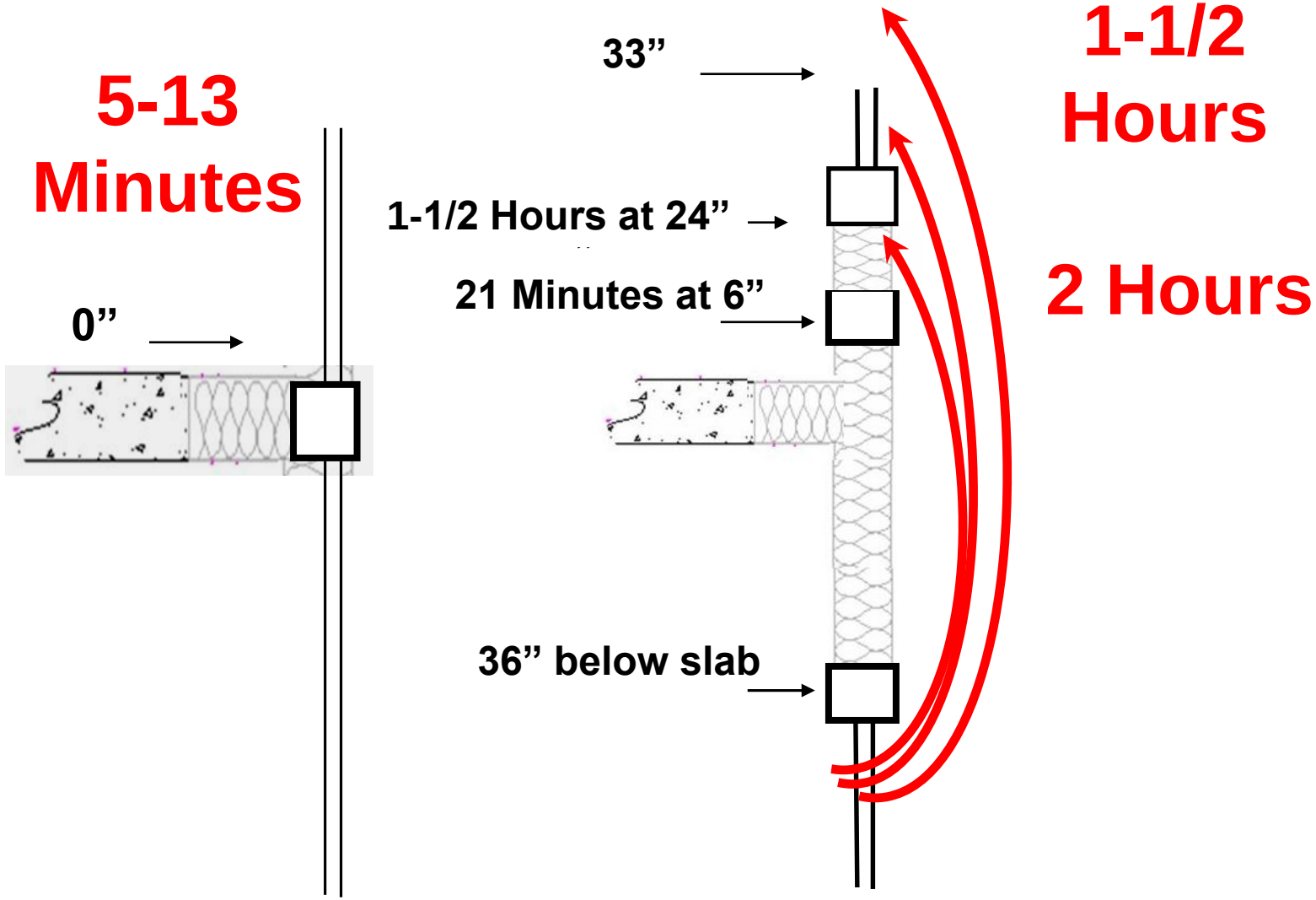
5-13 Minutes
0”
33”
1-1/2 Hours at 24”
21 Minutes at 6”
36” below slab
1-1/2 Hours
2 Hours

Current Assemblies

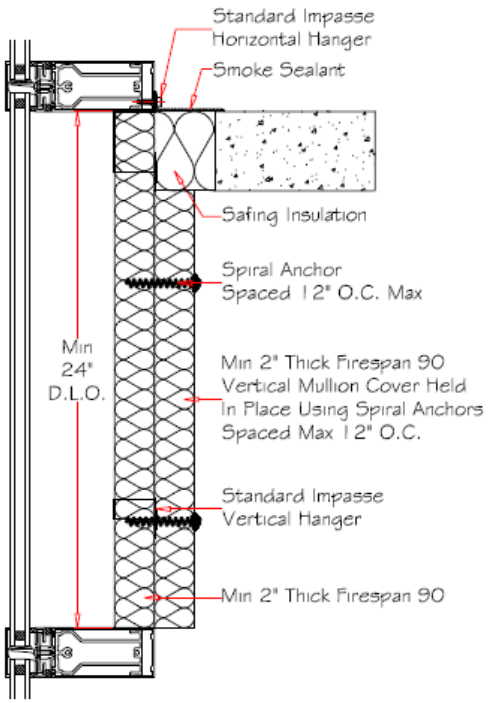

Design shows the bottom of the window-sill transom in line with the top surface of the floor slab:

- UL Designs exist to allow for the close proximity of the window-sill transom, with the special horizontal hangers, to eliminate the need for a backer reinforcement member.

- The transom and hangers will provide enough support to the curtain wall insulation to keep it from bowing due to the compression fit of the Safing Insulation. Not just any hangers will work for this system. See UL design for details.

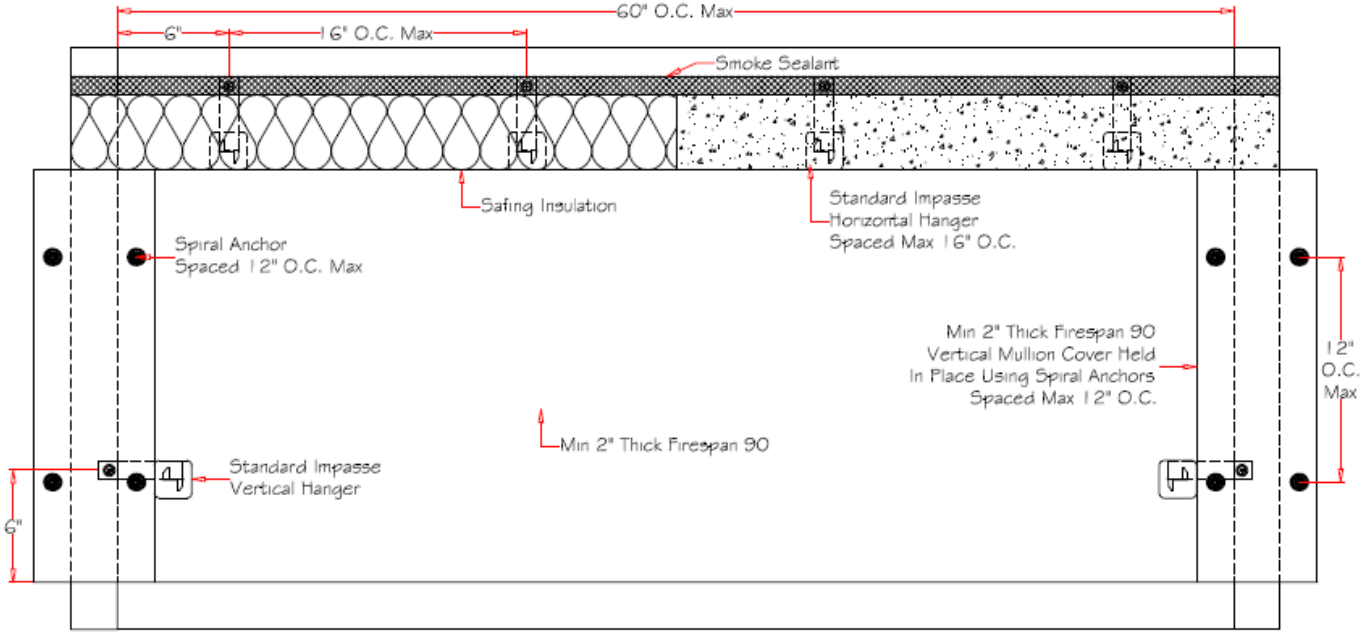

Current Assemblies

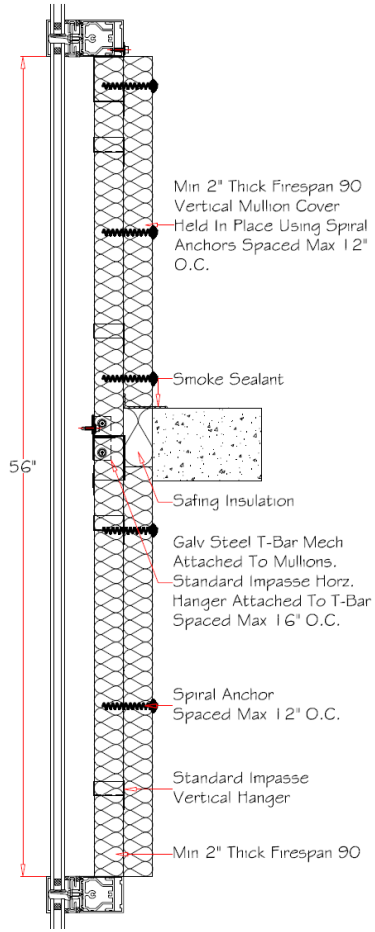

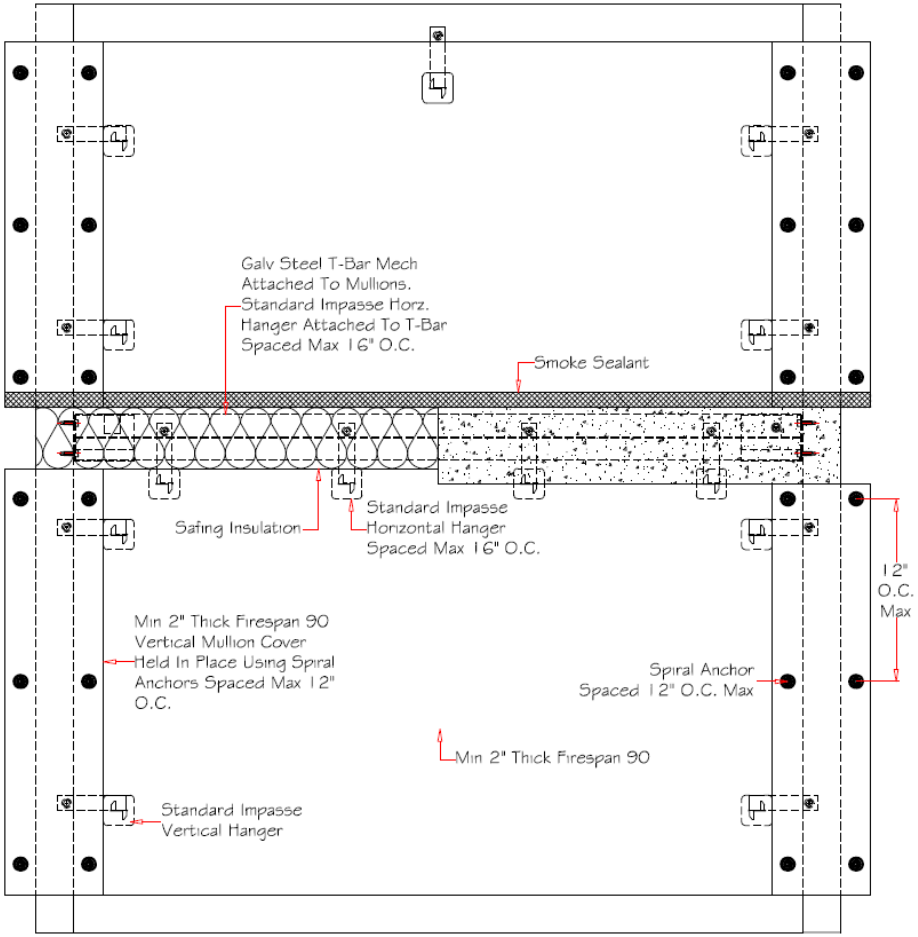

- This shows a typical installation of a perimeter fire containment system.
- Note the T-bar behind the curtain wall insulation.
- Mechanical fasteners in place, mullion covers installed to protect exposed vertical mullions.
- Safing Insulation compression fit within the safe-off void.
- A smoke sealant applied over the Safing Insulation.

Special Conditions

- **Short spandrel height**
- **Back pans**
- **Exposed curtain wall anchors at the floor line**
- **Wide spandrel**
- **Wide Safe-off area**
- **Geometry of spandrel wall**
- **Diagonal mullions**
- **Combustible building materials**

Short Spandrel Height

Considerations

- Shortest spandrel tested and listed is 10 inches
- Minimum exposed spandrel below floor slab is 5.5 inches
- Significant steel reinforcement is required
  - 20-ga. steel perimeter frame
  - Horizontal 3” 20-ga. steel T bar in front of spandrel insulation
  - 20-ga. continuous 1”x1.5” perimeter spandrel angle behind the spandrel insulation
- Mechanical attachment
  - At 8 inch frequency by pin method

Short Spandrel Height

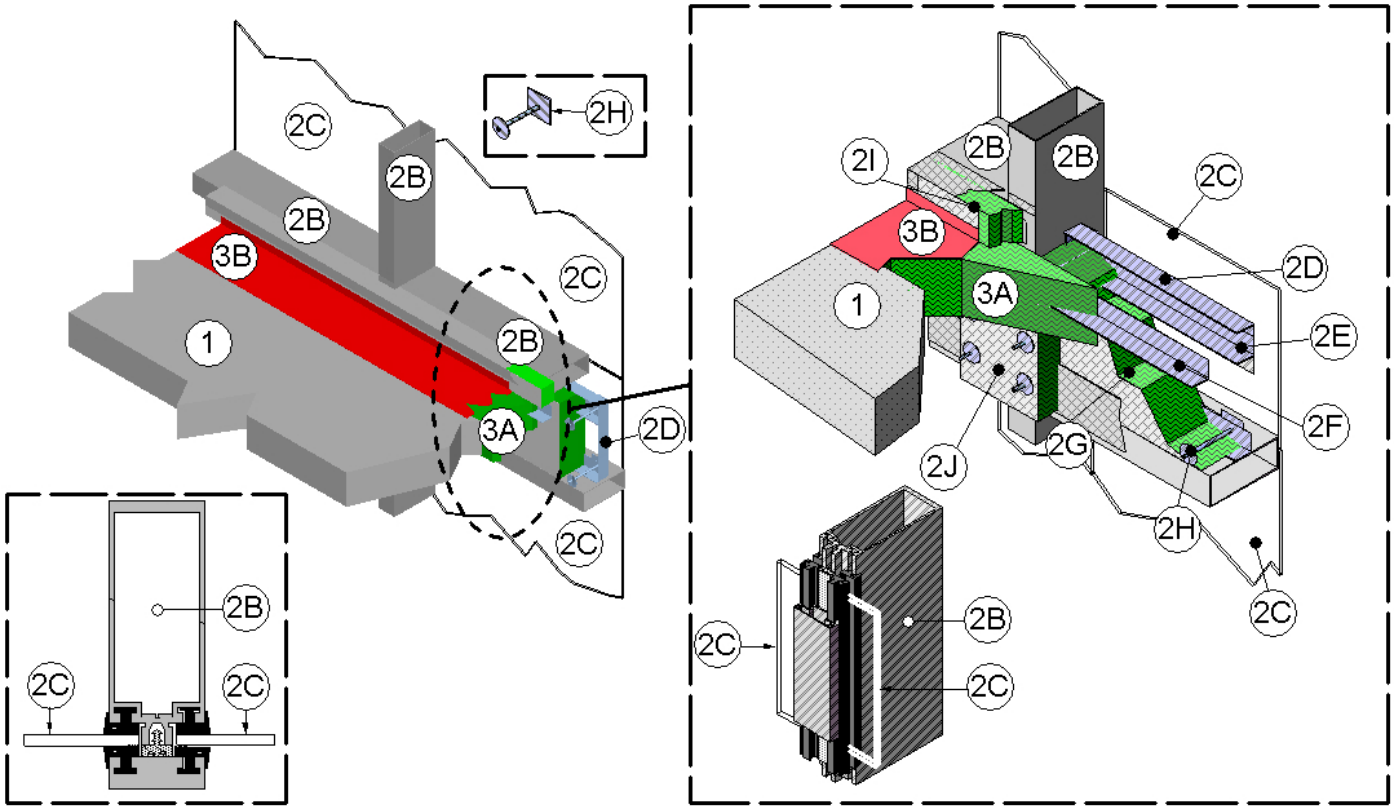

- The only tested & listed assembly that has ever passed a test shorter than 24” spandrel height.
- <u>More structural components required, yielding much higher costs.</u>
- Very difficult to construct in field.
- No spandrel consideration.

Steel Back Pans

Basic Backpan with Spandrel Insulation on the Inside of the Backpan

This particular system shows mineral wool covering and protecting the steel back pan to keep it from warping.

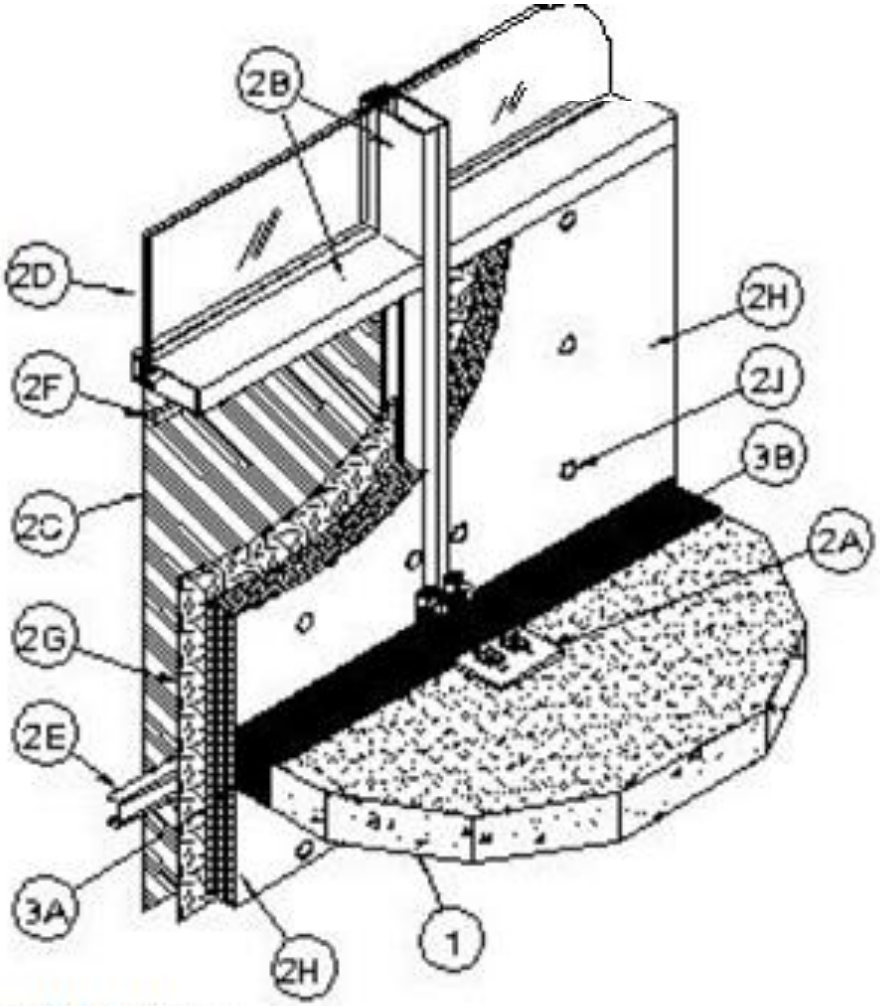

Perimeter Fire Barrier Education

Steel Back Pans

- Steel back pans are becoming quite common because of the popularity of unitized systems.

- The steel back pan is installed as the vapor barrier to the system. But these systems can have issues if not properly protected. Even though steel does not melt when exposed to heat, the pan will oil can, creating peaks and valleys.

- Unfortunately, the safing insulation can not conform to those peaks and valleys. Small seams form at safing line – allowing flame and hot gases to propagate the next floor.

Steel Back Pans

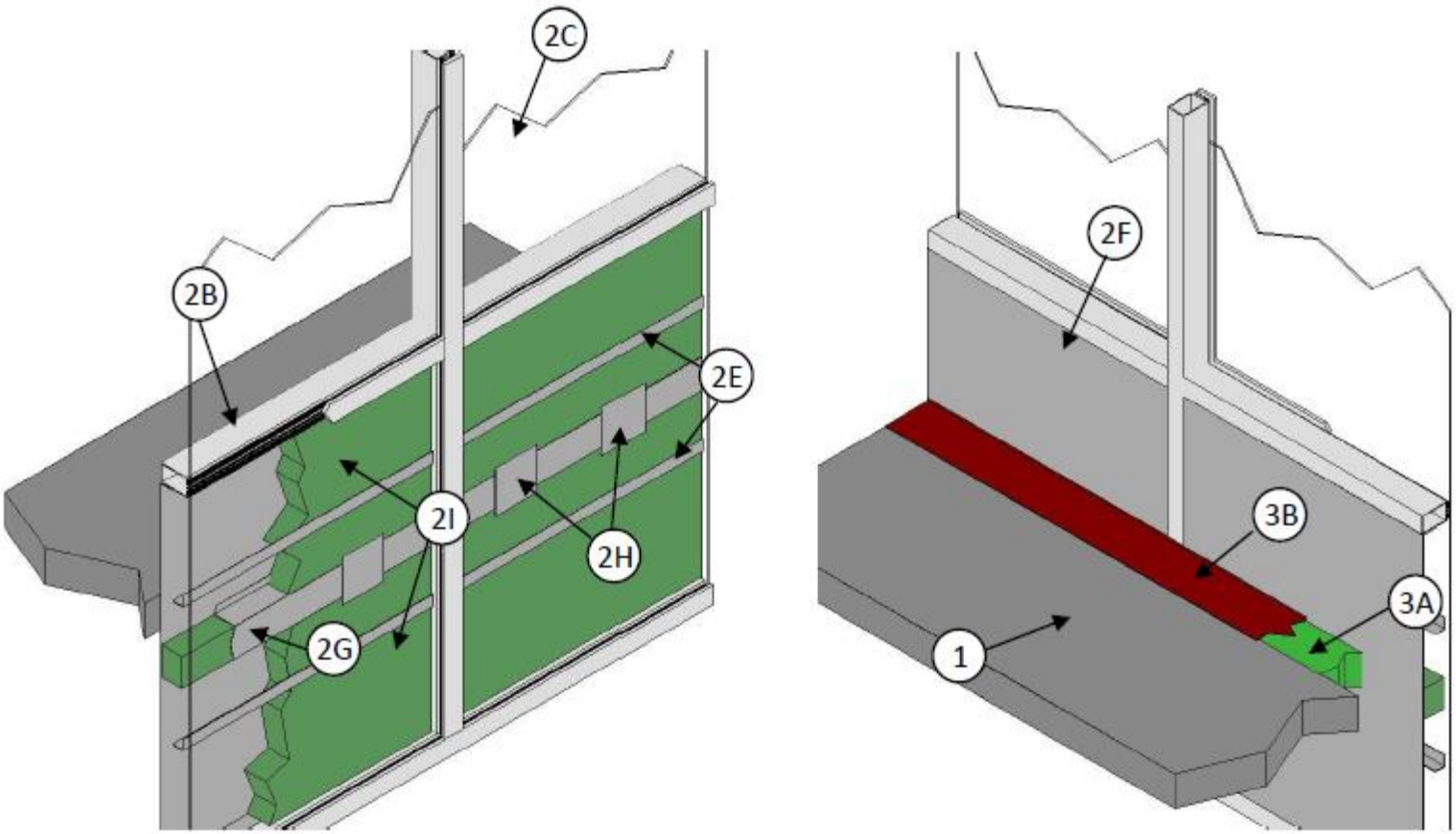

This is another listed assembly with a backpan on the back side of the spandrel insulation

Steel Back Pans

Backpan with Spandrel Insulation to the outside of the Backpan

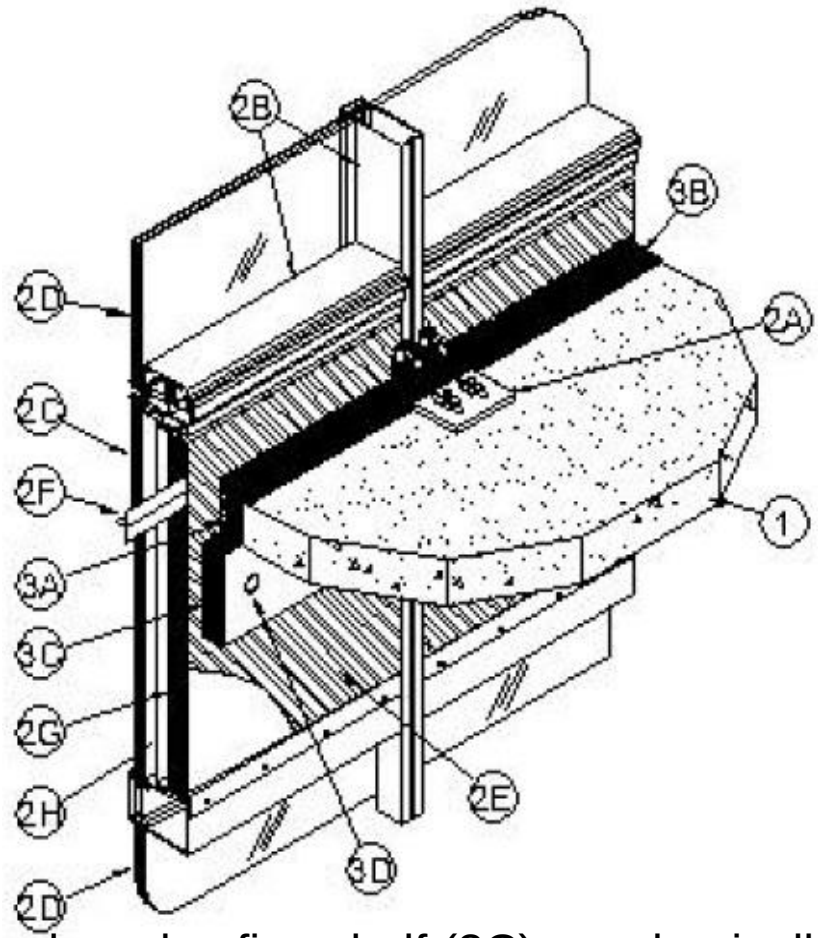

- System shows mineral wool safing shelf (3C), mechanically attached to the face of the steel panel via weld pin (3D) secure curtain wall insulation to steel backpan (3C)
- Shelf covers the seam between the interior face of the back pan and the Safing.
- If peaks and valleys occur, the seam is covered by the safing shelf

Steel Back Pans

CW-D-1037:

- First interior back pan with shortest spandrel achieving F and Integrity ratings of two hours
- Spandrel height = 30” o.c.
- Minimum 6” above floor

Significance:

- Elimination of the safing shelf from the assembly
- Shelf is very difficult to attach (welding issue, typically no room for a spot welder)

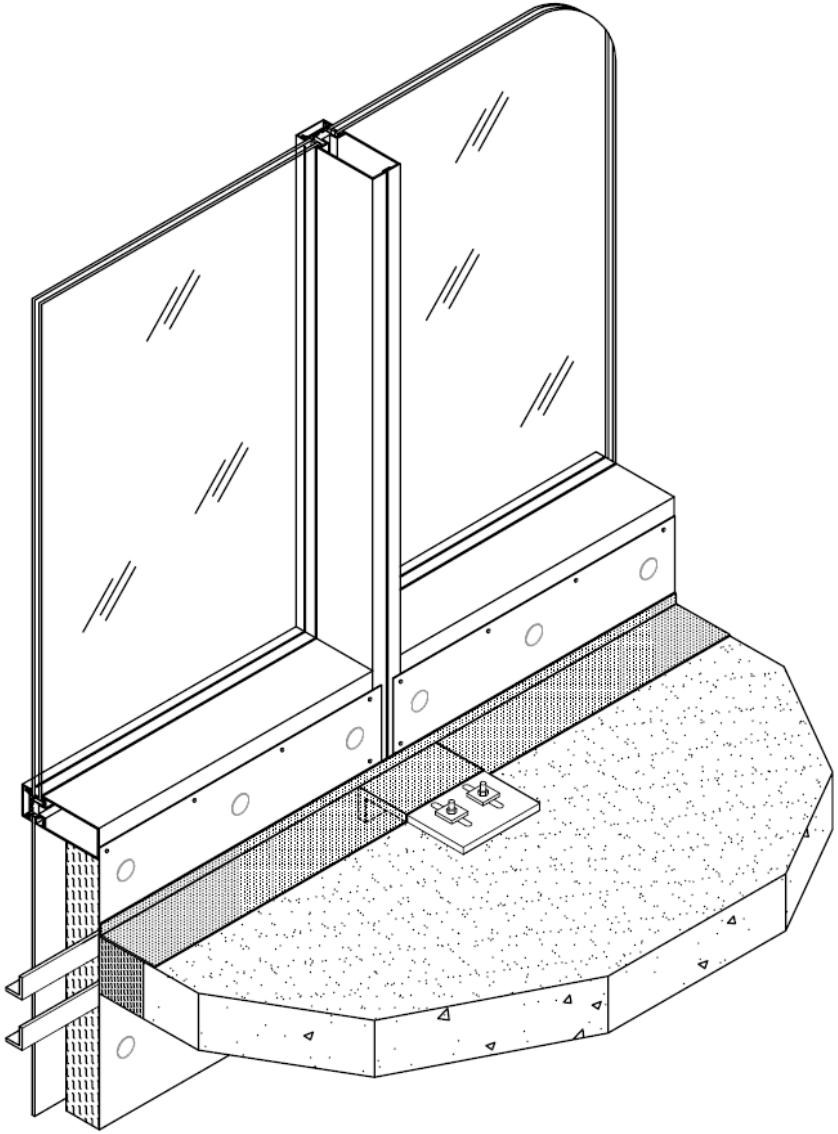

Steel Back Pans

Considerations

- Back Pan and/or Shadow Box on Front Side
  - Treat as if the back pan is not there
  - Complete perimeter fire containment is installed

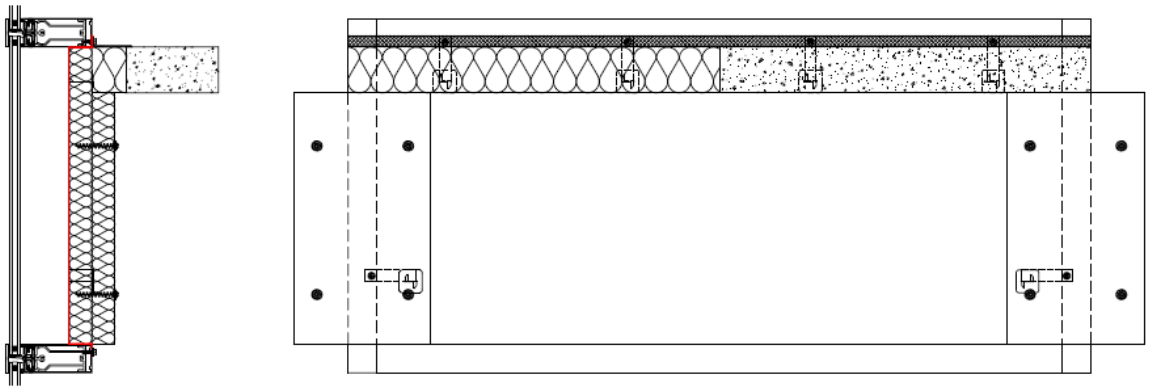

Steel Back Pans

Considerations

- Back Pan on Back Side
- Most difficult configuration to hold together during fire testing:
- When exposed to elevated temperatures, Steel back pan does not stay in plane due to high expansion coefficient
- Safing insulation does not have the ability to maintain its compression & follow the out of plane deflection of the back pan
- This design shows a shelf is required under the Safing
  - Difficult to install in building with perimeter beams
- Mechanical attachment of spandrel insulation is a min. of 12” o.c. across the entire span for fire performance and thermal performance
- Increased reinforcement required to keep back pan in plane
- Difficult to inspect

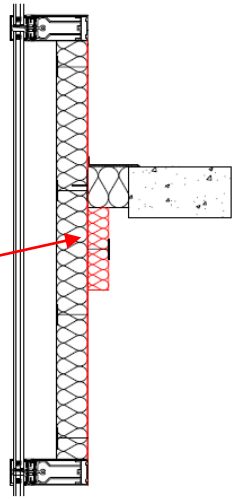

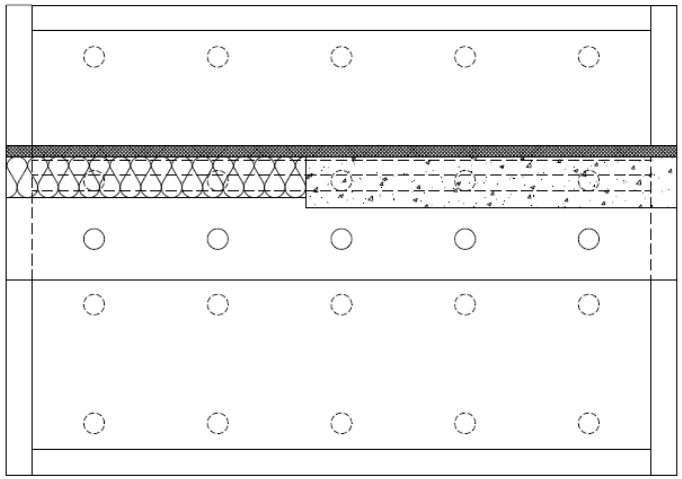

Steel Back Pans

- Back Pan on Back Side
  - Newer systems are available that eliminate the need for the Safing shelf
  - Same principles are required for providing additional reinforcement at the safe-off line
    - Mechanical attachment of spandrel insulation is a minimum of 12” on center across the entire

ASTM E2307 is important is with regard to backpans made outside of the US and not subject to ASTM E2307 testing.

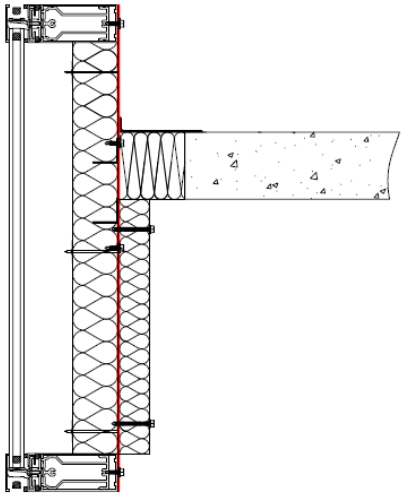

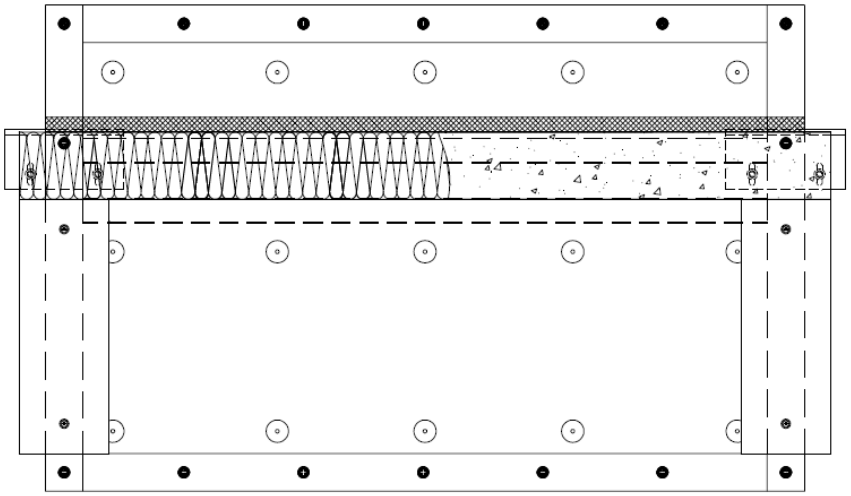

Exposed Anchors

Considerations

- UL Fire Resistance Directory states: “Curtain wall spandrel panel dead load anchors located below the concrete floor should be protected from direct fire exposure.”
  - Unprotected curtain wall anchors exposed below the floor line create a higher probability of complete system failure

- UL has created a new category (XHDI) for perimeter fire barrier accessories, which includes an anchor protection component

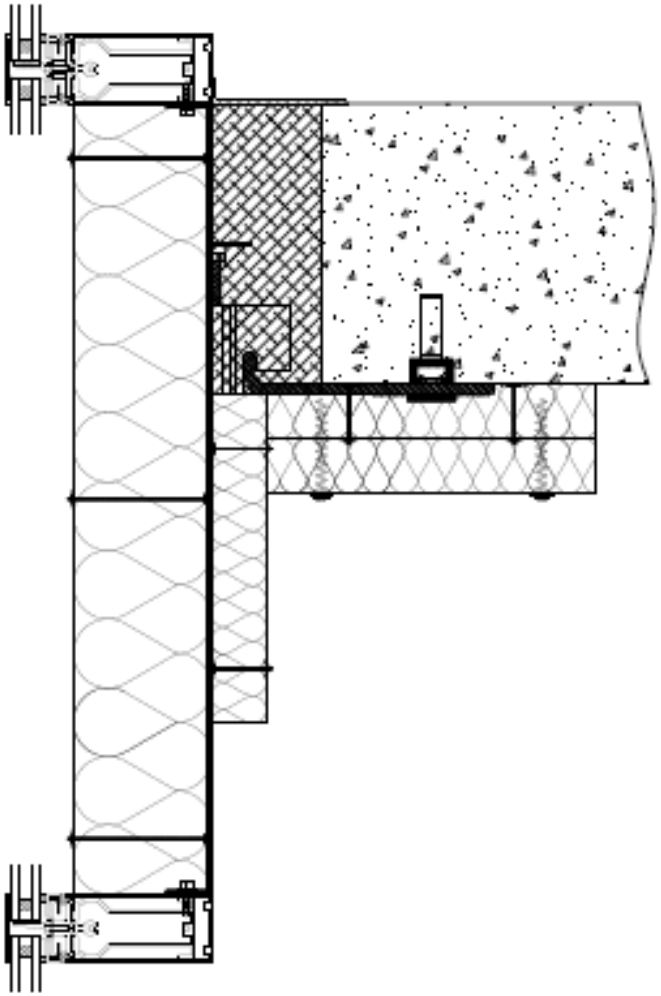

Wide Spandrel

Considerations

- No current method of evaluating
- Limitations of apparatus in ASTM E 2307
- Anything wider than 60” on center
  - Manufacturing limitations
- 98% of current systems do no allow for vertical seam
  - Only a few assemblies allow for a vertical seam
    - 4” thick or greater for curtain wall insulation
    - All hat channel designs with multiple horizontal steel structural members
    - Considerations of vertical seam:
      - Shrinkage
      - Allows for fire to pass through the Safing line
      - No framing member for mechanical attachment

Wide Safe-Off Area

Considerations

- Typical joint range is 2 to 6 inches wide
- Safing joints greater than 6 inches wide have difficulty keeping compression when unsupported over a wider span
  - Mineral wool insulation manufacturers should provide material recommendations based on the performance of Safing insulation under fire exposure
  - Recommendations are typically as follows:
    - Reference a tested system to ASTM E 2307 that evaluates wider Safe-off joints
    - Additional material thickness, mechanical support, or compression may be required where linear joint is wider than what is outlined in the respective listing

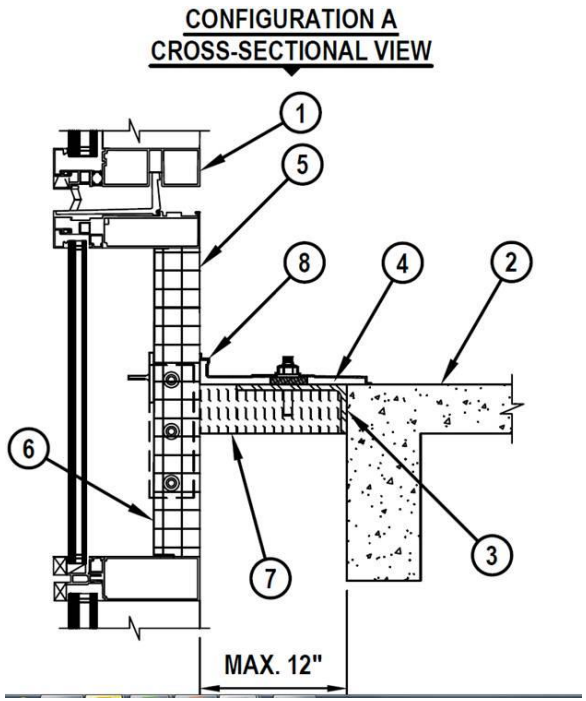

Geometry of Spandrels - Curved

Considerations

- No tested or listed assembly for curved curtain wall
- Conformance of spandrel insulation to the arc
  - Depends on degree of radius
- Limited mechanical attachment options
  - High cost custom mechanical fasteners required
- Custom support members
  - Radius backer reinforcement required in front of the spandrel insulation with same arc as the slab
  - Accommodate where there are varied joint width between slab and spandrel insulation

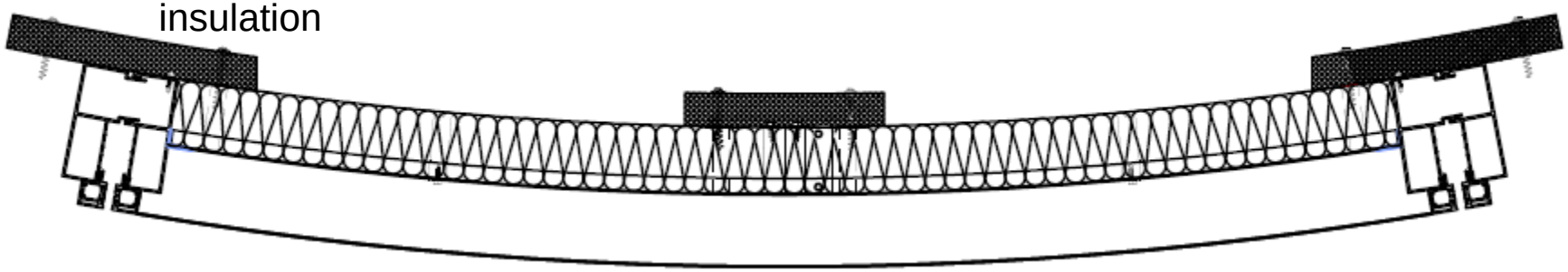

- There are specific methods to installing the safing for these specific conditions.
- Safing cannot follow the curve of the curtain wall insulation.
- Project based solutions must be created.
- Certain manufacturers provide solutions to these conditions.

Geometry of Spandrels - Angular

Considerations

- No tested or listed assembly for angular curtain wall
- Limited mechanical attachment options
  - High cost custom mechanical fasteners required
- Custom support members
  - Securing the Safing insulation in the linear joint
  - Compression percentage of Safing
  - Flame impingement – more fire exposure when angling out
- Varying linear joint widths creates difficulty in achieving Safing compression requirements
  - May require mechanical attachment to keep from dislodging over lifetime of the building

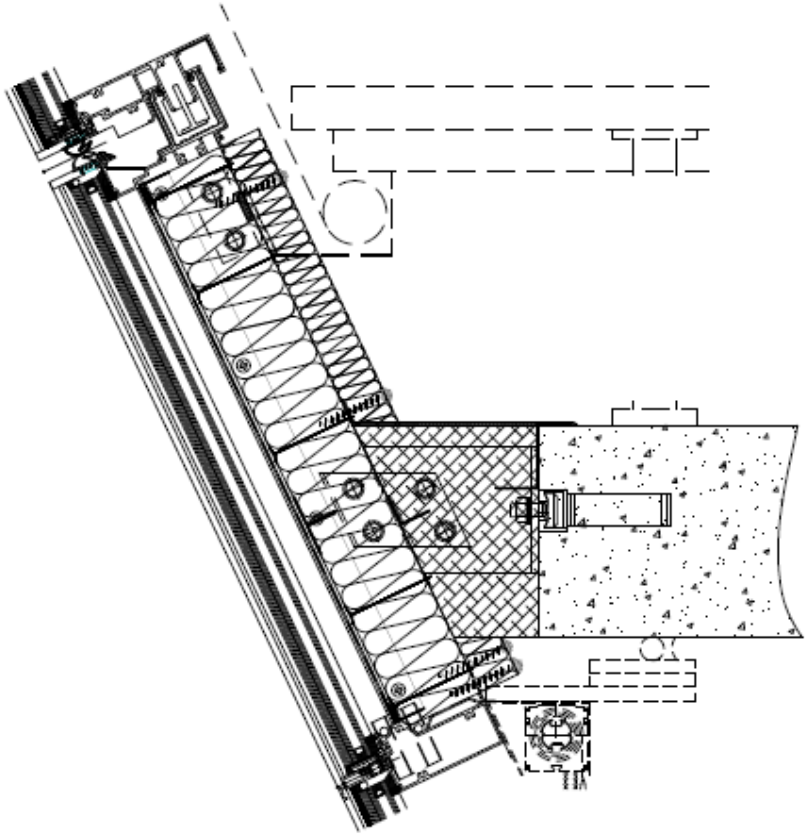

Diagonal Mullions

Considerations

- No tested or listed assembly for diagonal mullion condition
- Limited mechanical attachment options
  - High cost custom mechanical fasteners potentially required
- Custom attachment method may be required
- Custom support members
  - Compression percentage of Safing
- Wide Safing joint
- Possible creation of a spandrel insulation seam in the fire zone
  - May require custom fabrication of spandrel insulation to avoid creating a seam
  - Seam cover may be required

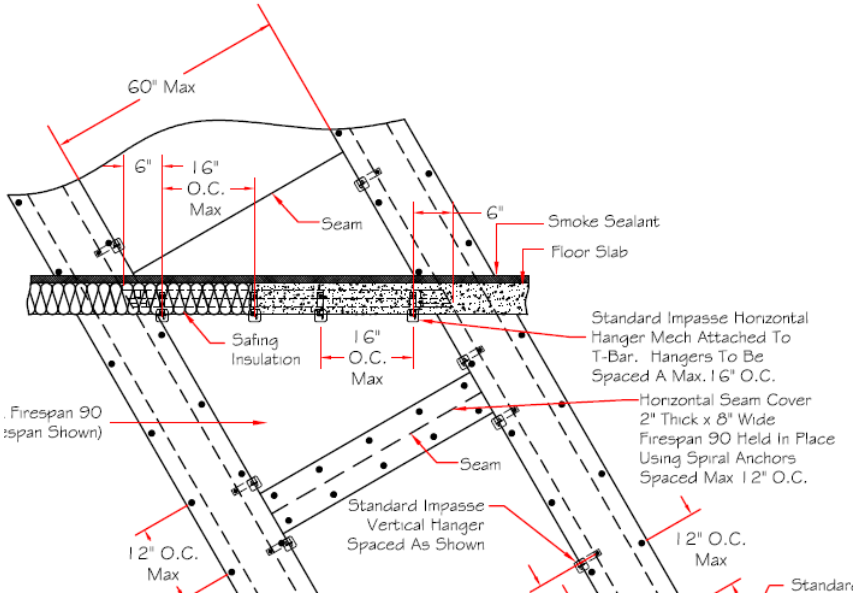

Combustible Building Materials

Requirements for Exterior Walls Containing Combustible Materials in the IBC

Material	Code Section
Foam plastic insulation	2603.5
Metal composite materials (MCM)	1407.10
Fiber-reinforced polymers	2612.6
High-pressure laminates (HPL)	1409.10
Water-resistive barrier (WRB)	1403.5

Combustible Building Materials

Considerations

- Provide additional fuel load under fire conditions

- Untested exterior facade panels
  - Unknown panel performance when exposed to ASTM E 2307 conditions
  - Should be NFPA 285 compliant, at the very least
  - Should be attached independent from the perimeter fire barrier system
  - Should not provide structural support of the perimeter fire barrier system
- Other untested building materials
  - Materials with known fuel sources should not be installed to a perimeter fire barrier assemblies to achieve targeted thermal values

International Firestop Council

INTERNATIONAL FIRESTOP COUNCIL

THE Source of Firestop Expertise®

Engineering Judgments

RECOMMENDED IFC GUIDELINES
FOR EVALUATING FIRESTOP SYSTEMS
IN ENGINEERING JUDGEMENTS (EJ's)

PERIMETER FIRE BARRIER SYSTEMS

The International Firestop Council, IFC, is a not-for-profit association of manufacturers and users of fire protective materials and systems. IFC's mission is to promote the technology of fire containment in modern building construction through research, education programs, and the development of safety standards and code provisions. These recommended guidelines are presented as part of the IFC's educational information program. They are for informational and educational purposes.

THE PREMISE OF FIRESTOP SYSTEMS

Perimeter Fire Barrier systems protect against the passage of fire, hot gasses and toxic smoke through the void between the floor slab edge and the curtain wall.

These systems are required by building codes to be tested and rated as part of an assembly in accordance with ASTM E 2307, Standard Test Method for Determining Fire Resistance of Perimeter Fire Barrier Systems Using Intermediate-Scale, Multi-Story Test Apparatus, or with an approved material capable of preventing the passage of flame and hot gases sufficient to ignite cotton waste when subject to ASTM E119 time-temperature conditions under a positive pressure differential of 0.01 inch water column.

All elements of a tested and rated perimeter fire barrier system, including the assembly into which the system is installed, constitute a specific and inseparable engineered unit that must be utilized as such. These systems (designs) are tested and listed by independent testing agencies and the specific elements of each design become a part of the listing and a necessity for the performance of the system.

IFC Engineering Guidelines

Perimeter Fire Barrier system engineering judgments should:

1. Not be used in lieu of tested systems when tested systems are available.

2. Be issued only by firestop manufacturer‘s qualified technical personnel or, in concert with the manufacturer, by a knowledgeable registered Professional Engineer, or Fire Protection Engineer, or an independent testing agency that provides listing services for the systems.

3. Be based upon interpolation of previously tested perimeter fire barrier systems that are either sufficiently similar in nature or clearly bracket the conditions upon which the judgment is to be given.

   Additional knowledge and technical interpretations based upon:
   - accepted engineering principals
   - fire science and fire testing guidelines
     (e.g. ASTM E 2032 – Standard Guide for Extension of Data from Fire Endurance Tests)

IFC Engineering Guidelines

Perimeter Fire Barrier system engineering judgments should:

4. …It is important to understand that although it is the joint between the slab edge and curtain wall that is evaluated during testing, **the surrounding construction components** and insulation of the system is also important in insuring acceptable joint performance.

5. Be limited **only to the specific conditions and configurations** upon which the engineering judgment was rendered…

6. Be accepted **only for a single specific job** and location and should not be transferred to any other job or location without a thorough review of all aspects of the next job or location's circumstances.

Quality Engineering Judgements

Quality engineering judgements follow IFC guidelines and include:

1. Letter of judgement
   - References the specific project's documents and drawings
   - Documents the basis of design
   - References the most closely representative listed design(s) for the given condition(s)
     - If more than one listed design is referenced, the engineering judgement must also include specific design criteria from each referenced design
   - Justifies hourly judgement
     - Where variance exists from the listed systems, we provide descriptive justifications of how the system will provide the hourly ratings

2. Drawing
   - Represents the given condition(s)
   - Includes the critical elements required to make the system perform to the Integrity and F ratings
   - Gives a clear understanding of how the assembly should be constructed

Revision Number	Description	Date

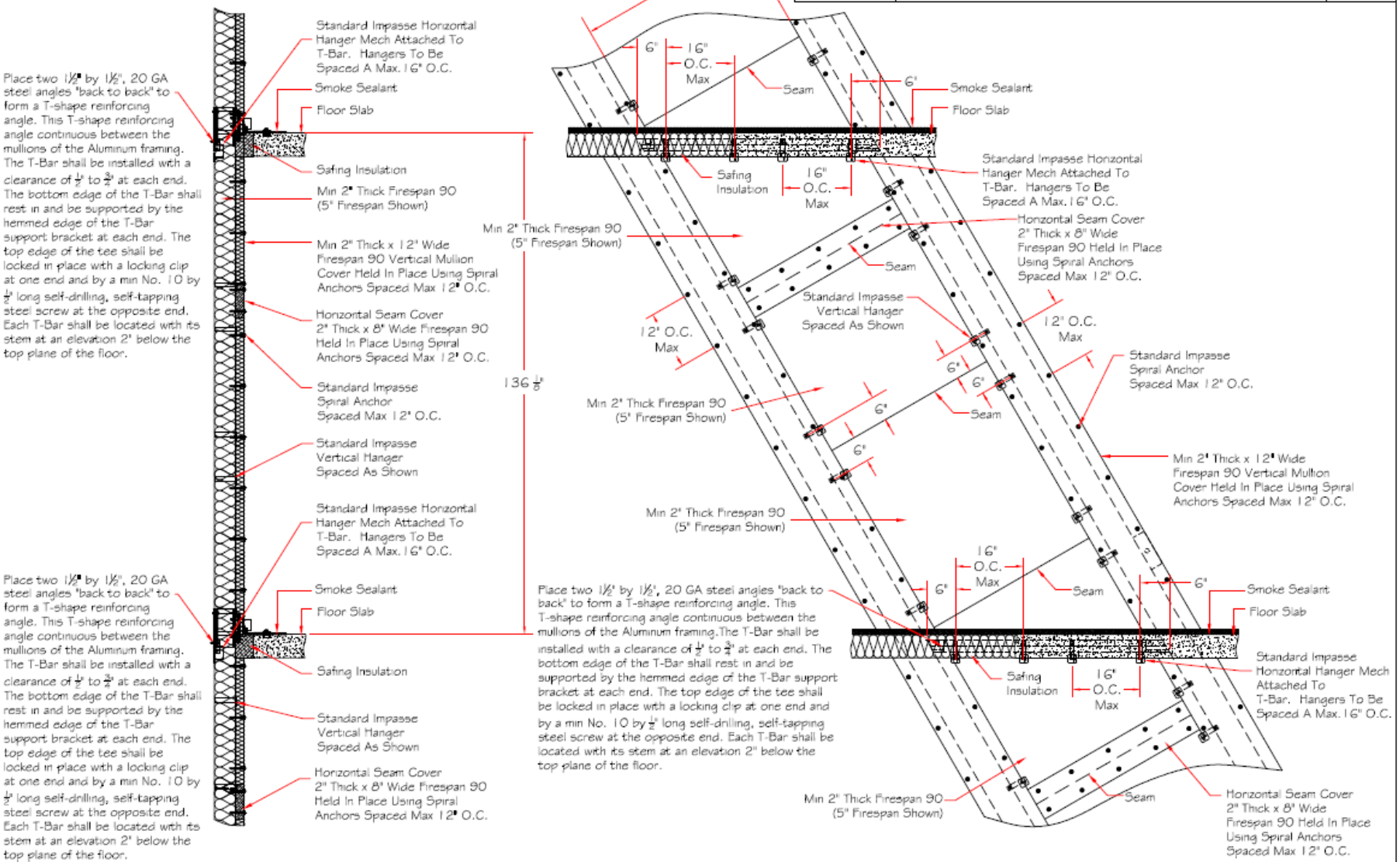

APRV BY: _____

Signature: _____

Printed: _____

DATE APRV: / /

Dimensions ± 1/32"

Angle ±2°

Job Name:

LOCATION: CITY AND STATE:

DRAWING NUMBER:

Questions?

Contact Information

Susan Raneri

AEC Solutions Leader, Northeast

Owens Corning

Phone: 617.999.2737

Email: susan.raneri@owenscorning.com

www.owenscorning.com

www.thermafiber.com